PxG® Planetary Servo Gear Units

Performance Classes
P5.G, P6.G, P7.G

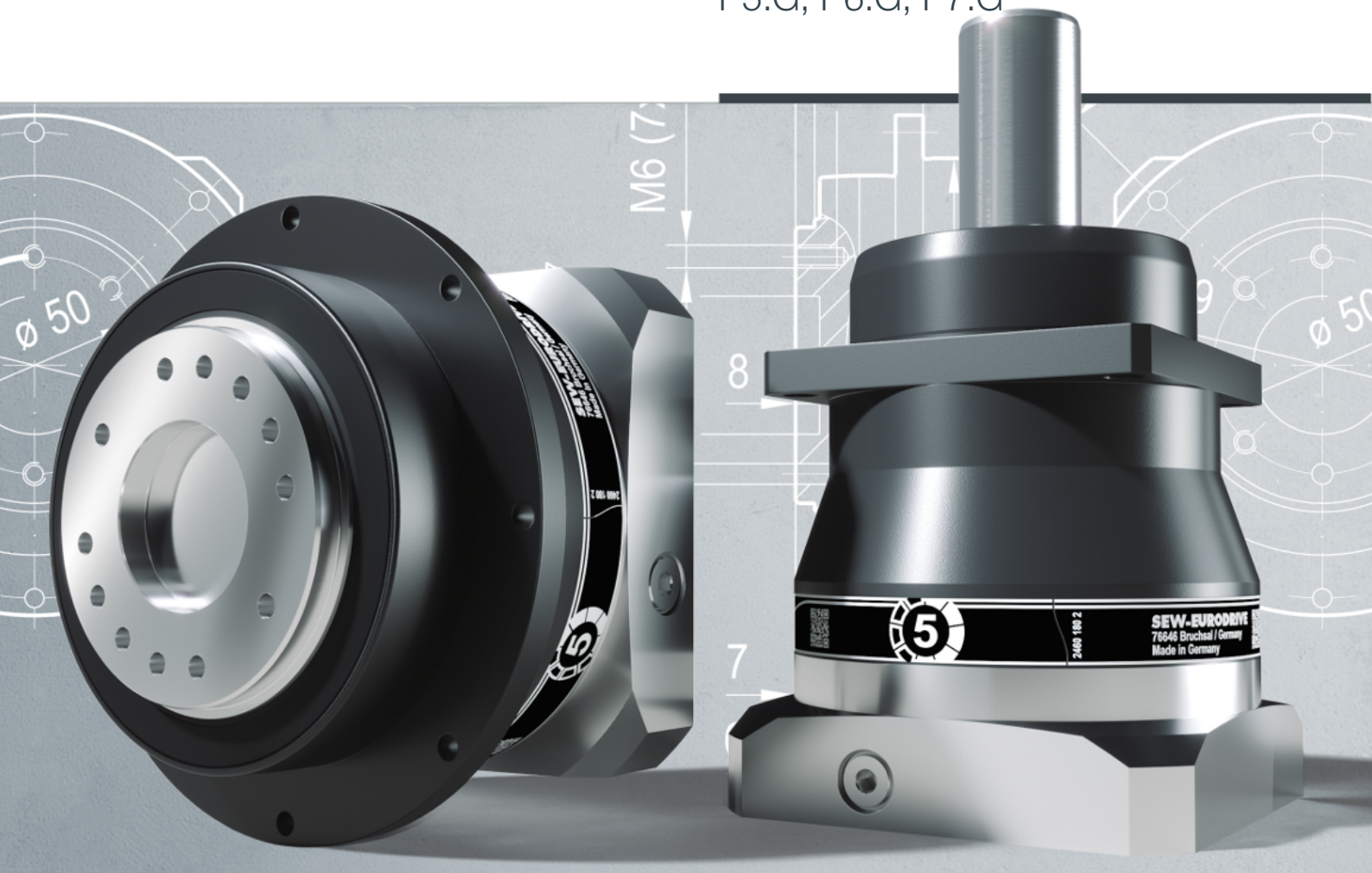

Catalog

Edition 03/2022

27781410/EN

PxG® Planetary Servo Gear Units

Performance Classes
P5.G, P6.G, P7.G

SEW EURODRIVE

SEW-EURODRIVE
Made in Germany

Table of contents

1 Products, solutions and services by SEW-EURODRIVE 14

2 The new PxG® planetary servo gear unit 16

2.1 Product features 18
2.1.1 Gearing surfaces 18
2.1.2 Bearing systems 18
2.1.3 Sealing systems 18
2.1.4 Tribological systems 19
2.1.5 Efficiency 19
2.1.6 Adapter kit 20
2.1.7 Corrosion resistance 20

2.2 Added value with the modular concept of P5.G to P7.G 21

2.3 Type designation 24

2.4 Nameplate 26

2.5 Gear unit designs and options 27

2.6 Overview of torques 28

3 Servo gear units of the type P5.G 32

3.1 Possible use and target applications 35
3.1.1 Machine tool gantry 35
3.1.2 Mounting press 36
3.1.3 Drilling and pegging machine 37

3.2 Technical data and dimension sheets 38

4 Servo gear units of the type P6.G 124

4.1 Possible use and target applications 127
4.1.1 Filling and transfer starwheel 127
4.1.2 Printing machine 128
4.1.3 Diaper machine 129

4.2 Technical data and dimension sheets 130

5 Servo gear units of the type P7.G 198

5.1 Possible use and target applications 201
5.1.1 Laser cutting machine 201
5.1.2 Delta kinematics 202
5.1.3 Chain magazine and tool changer 203

5.2 Technical data and dimension sheets 204

6 Adapter kit 246

6.1 Adapter types 246

6.2 Coupling sleeves 247

6.3 Adapter flanges 248

7 Project planning 249

7.1 Gear unit characteristic map **249**

7.2 Project planning procedure **251**

7.2.1 Determining the radial load 252

7.2.2 Dynamic factor f_{dyn} 254

7.2.3 Project planning procedure for servo gear units 256

7.2.4 Project planning procedure for servomotors 259

8 Appendix **261**

8.1 Information on the technical data and dimension sheets **261**

8.1.1 Information on the technical data – Definitions 261

8.1.2 Information on the dimension sheets – Geometric tolerances 263

8.1.3 Information on the dimension sheets – Centering bores 263

8.1.4 Information on the dimension sheets – Key 263

8.2 Abbreviations and descriptions **264**

Who are we?
The reliable partner at your side!

For 90 years, the owner-operated family business SEW-EURODRIVE has stood for a diverse range of values, including everything from a personal, partnership-based approach, solutions and services to responsibility, quality, tradition, innovation and a whole lot more besides.

As a market leader in drive and automation technology, we don't just power countless applications in virtually every industry. With over 19000 employees, we are also playing a key role in shaping the future of drive technology. For you. Ensuring you, your systems and machines are always at the cutting edge. Not just now, but in the future as well. We want you to achieve success with us.

52 countries

17 production plants

85 Drive Technology Centers

Over **19000** employees

Global service

Countless industries

Where can you find us?
Always near you!

Our 17 production plants and 85 Drive Technology Centers in 52 countries mean we are at your service on every continent and in every corner of the world, always working with you as an equal partner and ensuring everything runs smoothly.

What makes us truly stand out from other manufacturers? With our broad customer support and service network worldwide, you never have to wait long for spare parts, repairs or professional advice.

27781410/EN – 03/2022

What do we offer?

State-of-the-art drive technology and automation solutions from a single source!

Looking to modernize your processes or you construct a new system? We offer you one of the most extensive ranges of drive technology products, solutions, and services on the market. One contact person for everything – that sounds good, doesn't it?

The SEW-EURODRIVE modular system

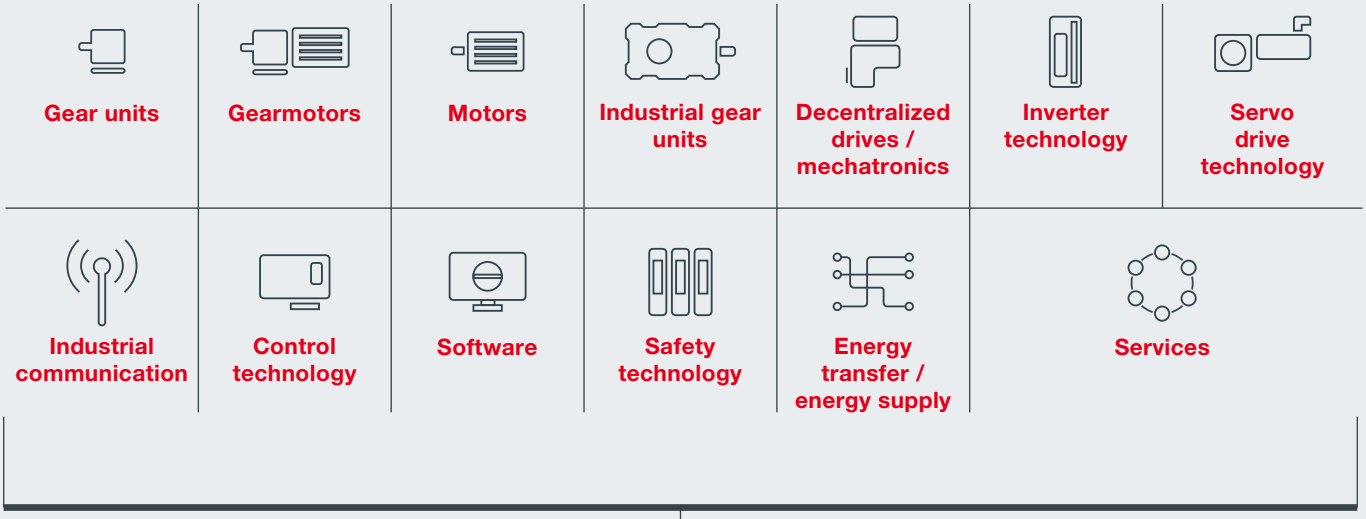

Complete drive solutions for factory and machine automation

From the very outset, our customers have been able to rely on our high quality, committed advice and support and fast delivery times. We offer a portfolio of modular solutions that are comprehensive and unique and meet every possible need:

- Perfect combination options and solutions for every application
- Energy efficiency up to IE5
- Quick and easy selection process and project planning
- Comprehensive portfolio – from drives and motors for continuous operation to high-precision servo drives
- Special designs in stainless steel, with explosion protection, or for electrified monorail systems
- Ideal solutions for every application
- Complete automation solutions for your machine or factory and many other areas

Independent of the project scope and the complexity of your requirements: We rise to the challenge, working with you to develop the perfect solution for you – including an all-round service package throughout your entire system life cycle on request.

Right now, predictive maintenance is one of the top service trends. Early diagnosis and end-to-end condition monitoring have been an essential part of our offering for many years. That's because one thing in particular matters to us – the satisfaction and trust of our customers. From planning and the operation phase all the way to modernization. Where necessary, we also take care of drives from other manufacturers.

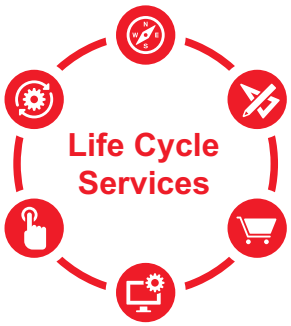

27781410/EN – 03/2022

What are the goals we want to reach with you?

We want to take you to the top!

Nothing excites us more than the future of production. We're already using Industry 4.0 principles to transform our manufacturing operations. As far as we're concerned, Industry 4.0 ceased to be a distant vision long ago – it is already a successful reality thanks to our smart factory. As a result, we've become one of the world's pioneers in this field.

Yet we don't just focus on increasing our performance to ever greater levels. We also pass on to you the expertise, experience and technical solutions we have gathered in implementing Industry 4.0 in our production halls. Why not find out more?

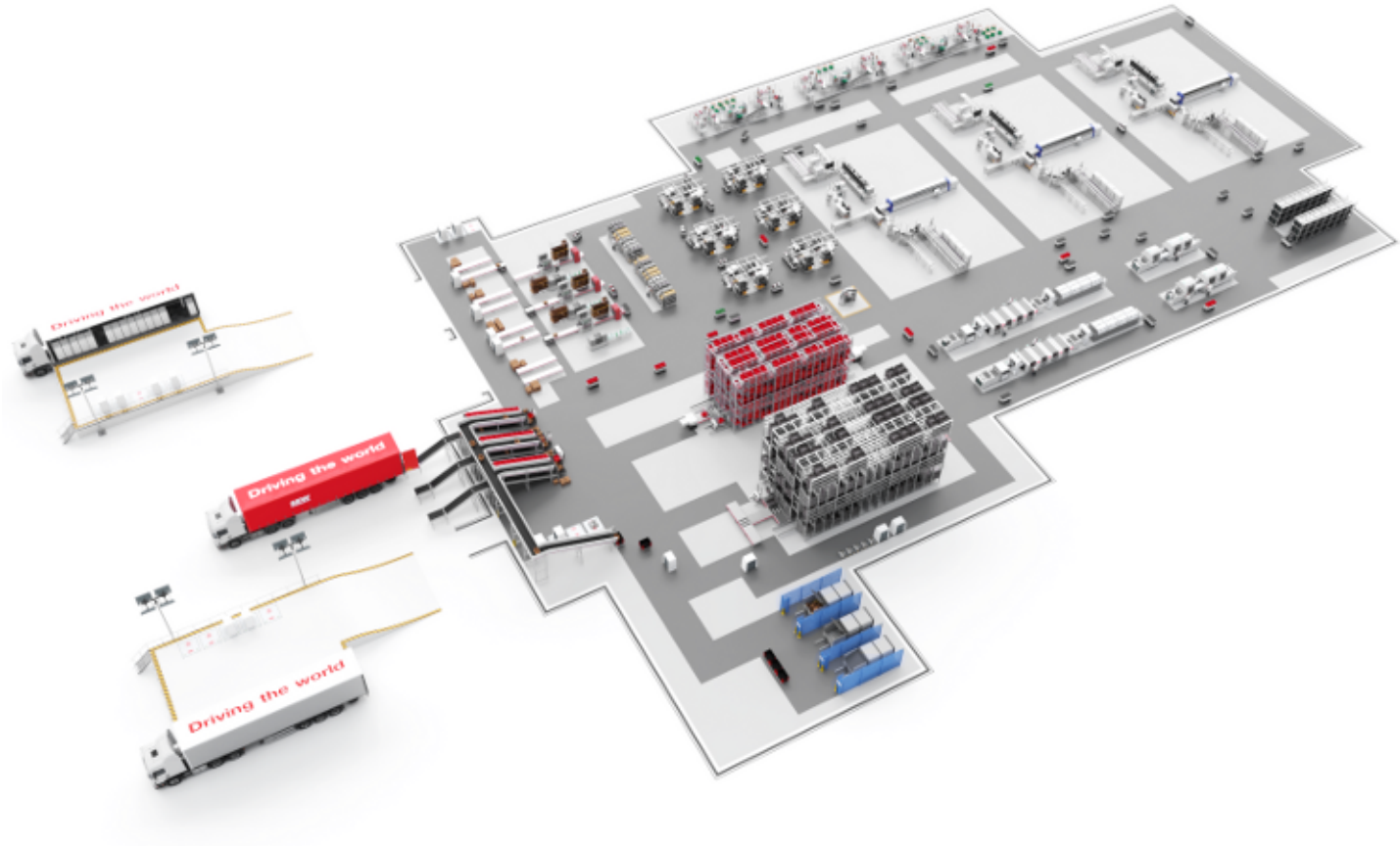
Driving the world
Driving the world
Driving the world

SEW
EURODRIVE

Why should you choose SEW-EURODRIVE?

Because these ten reasons speak for themselves:

You're more flexible

However much the requirements for your processes and production systems increase, we're there for you every step of the way. With rapid conversions, short delivery times, enhanced capacity and faster format changeovers, we're at your side – from evaluating your needs and implementing flexible solutions all the way to service offers.

You're more satisfied

Our name stands for the best quality. But we don't rest on our laurels. Quite the contrary, in fact. To ensure we meet all standards – both ours and yours – we undergo annual testing, including certification processes. That's because only one thing matters to us – the satisfaction and trust of our customers.

You're informed

We're happy to share with you the industry and application expertise we have gained over decades and extending far beyond drive technology areas. We work with you to plan and put into practice your tailored solutions.

You're more future-proof

We take responsibility for our employees, customers and business partners but also the environment in which we live and work. As a family business, we think in generations and always look beyond today and tomorrow. With us, you too can drive the future.

You're more successful

Like you, we cannot afford to stand still. We provide continuous training for our employees and customers. We constantly expand our horizons and enhance our products, solutions and services, and thus your processes. You can only continue to be successful in the future with optimized workflows.

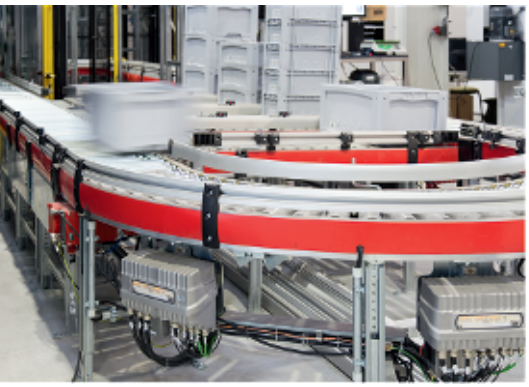

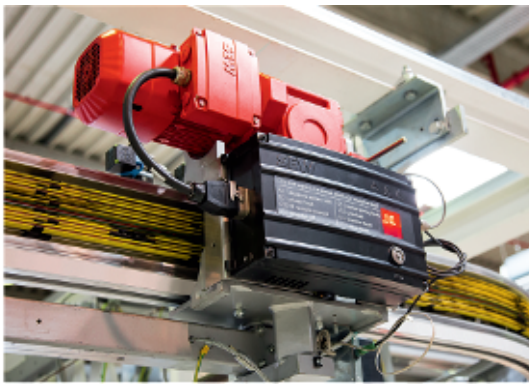

You're more energy-efficient

We go out of our way to find new approaches and make our drives more efficient while always staying well ahead of international regulations. And, if you wish, we work with you to plan your systems and machines so that you can make the best possible use of energy recovery.

You're more innovative

What's the point of innovations if they remain out of your reach? We listen to you, which makes us fully aware of your future challenges, and we respond accordingly: With our approximately 900 developers, we drive forward innovative technologies and help bring your processes up to date.

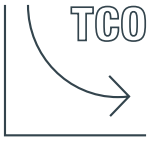

You're more cost-efficient

With us, you cut your overall operating costs. After all, it isn't just a matter of procurement expenses. Your TCO is significantly determined by the subsequent utilization and service life of your drive technology. We show you how to reduce your costs through sustainable operations.

You're nearby

Wherever in the world your system is running, our comprehensive service network and experts mean we're always ready to provide advice and practical assistance when you need it. All-in-one, on-site service that knows no bounds and significantly reduces or even eliminates downtimes.

You're faster

Throughout the world, our service staff ensures spare parts get to you fast and faulty drives are collected and repaired quickly regardless of the manufacturer. Software tools make engineering and startup easier for you. Services covering your entire system life cycle help make you faster and more efficient.

1 Products, solutions and services by SEW-EURODRIVE

Our products stand for variety, quality, reliability, and innovative strength. These characteristics are at the heart of our entire product portfolio. As one of the leading producers for drive and automation technology worldwide, we offer them to you. Take us at our word, and choose the perfect drive solution from our modular system.

PxG® planetary servo gear units

The PxG® planetary servo gear units seamlessly integrate into the product range of SEW-EURODRIVE and offer the overall security of a globally active market leader for drive and automation technology.

27781410/EN – 03/2022

Our services for your success

Another module in our portfolio are the comprehensive Life Cycle Services by SEW-EURODRIVE. These services enable us to offer tailor-made solutions from a single source and thus meet your specific requirements throughout the entire life cycle.

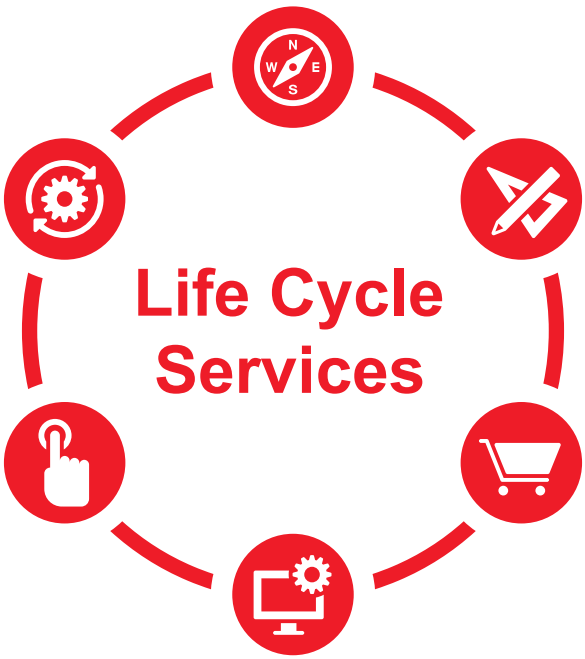

Everything from a single source

You are provided with services that are closely linked to our portfolio of products and solutions – all from a single source.

Procurement & delivery

We offer "extra" process efficiency and consulting in the procurement process. For example, electronic data exchange and barcode labels on the products.

Installation & startup

You can ensure the functionality of your system with a certified installation, optimization and startup. Doing this, you have the support of our service experts and engineers who will provide you with installation consulting, application programming and startup.

Safety

You receive quick and reliable assistance to guarantee the safety of your production process. With a worldwide service network that is available 24/7.

Planning & engineering

We will provide you with optimum planning – even before you place an order. You will be supported by technical experts who have an in-depth understanding of your industry and applications.

Utilization phase

We support you during production, so that your system availability and productivity are constantly improved.

27781410/EN – 03/2022

2 The new PxG® planetary servo gear unit

P5.G series – The scalable all-rounder

- Standard gear unit design in a modular concept to obtain high dynamics
- Torque and geometrical compatibility correspond to the market standard
- High wear protection due to hardened gearing
- Optimized for short-time duty, with a cyclic duration factor of up to 60%
- Designed for a service life of at least 20 000 operating hours

P6.G series – The fast endurance runner

- Modified gear unit design for high rotational speeds and continuous duty
- Adjusted bearing concept to reduce thermal losses, as well as increase efficiency and service life
- Use of a bellows coupling to equalize length and protect the bearing inside of the adapter
- Optimized for continuous duty, with a cyclic duration factor of up to 100%
- Designed for a service life of at least 30 000 operating hours

P7.G series – The precise power pack

- Modified gear unit design for highest possible torque density
- Increased overload capacity
- Maximum precision built in as standard
- Optimized for short-time duty, with a cyclic duration factor of up to 60%
- Designed for a service life of at least 20 000 operating hours

27781410/EN – 03/2022

All the series at a glance

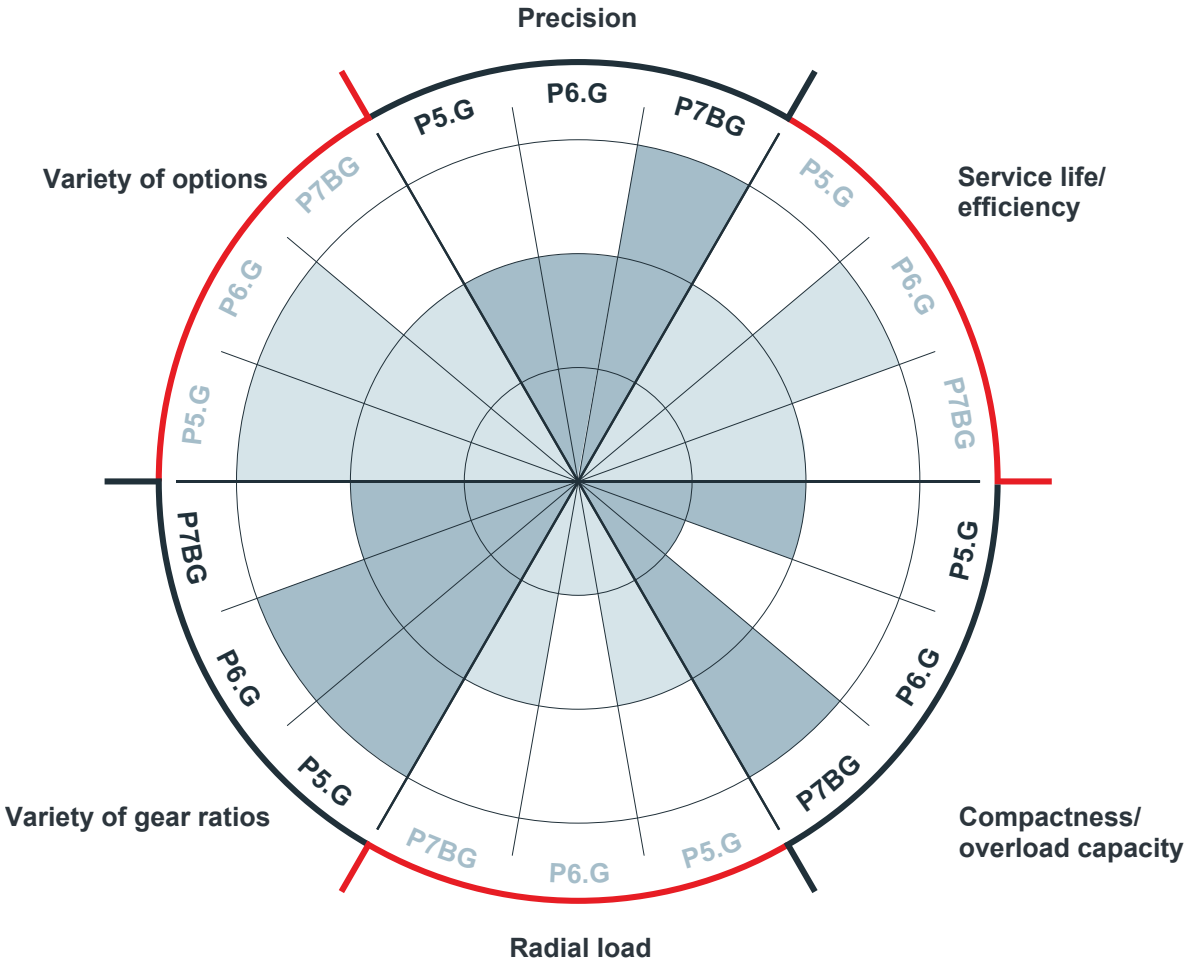

27781410/EN – 03/2022

2.1 Product features

2.1.1 Gearing surfaces

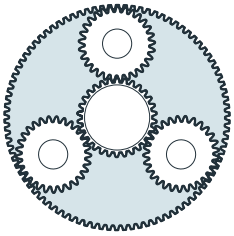

The newly developed procedures for processing and surface treatment allow for creating tribologically optimized gearing surfaces. This enhancement allows for a safe and precise transmission of torques. At the same time, the contact conditions in the tooth meshing provide maximum wear protection while achieving maximum efficiency.

2.1.2 Bearing systems

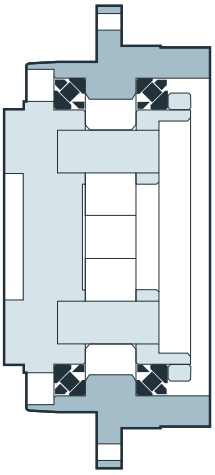

Using the latest simulation procedures based on the finite element method, the distribution of contact pressure can be precisely calculated and the bearing service life can be precisely predicted.

The design of the servo gear units allows for the use of various types of output bearing in the same installation space. Depending on the technical requirements or the desired type of output, several performance classes can be selected that are equipped with different bearing systems.

2.1.3 Sealing systems

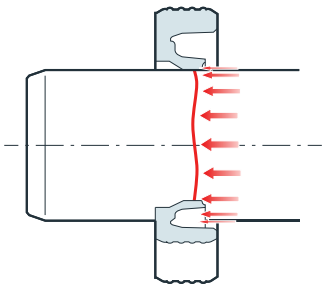

The seal within the gear unit adapter is essential for the durability of gear units. As standard, the servo gear units are equipped with the exclusive Premium Sine Seal.

The sinusoidal shape of the sealing lip increases the contact surface between sealing lip and shaft surface. Due to the reduced pretension, wear is reduced and the service life is doubled in comparison to conventional oil seals.

27781410/EN – 03/2022

2.1.4 Tribological systems

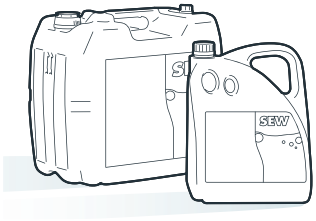

The servo gear units are lubricated for life at the factory. Depending on the range of application, the lubricant can be flexibly selected.

As standard, a synthetic oil from the SEW-EURODRIVE GearOil series is used, this oil has been developed and optimized especially for the PxG® planetary servo gear units.

Grease can be used as an alternative (P6.G series only). Doing this reduces the churning losses and increases the efficiency.

Food-grade lubricants are also available for the use in food industries.

2.1.5 Efficiency

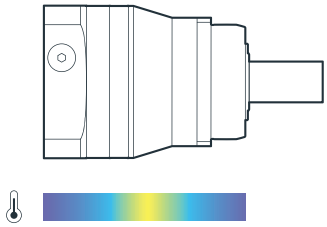

The modular concept of the servo gear units allows for the use of various bearings, sealing and lubrication systems. Thus, the gear unit is perfectly tailored to the requirements of the application while using standard components.

For operation in continuous duty or with high rotational speeds, the thermal losses can be further reduced by using a grease lubricant, a non-contact seal, or a friction-reduced bearing in the output stage.

27781410/EN – 03/2022

2.1.6 Adapter kit

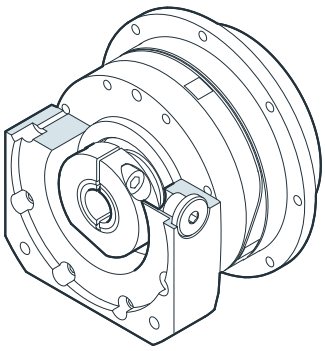

The flexible and modular adapter kit allows for the mounting of servomotors by SEW-EURODRIVE and other manufacturers. According to the power rating, servomotors in various sizes can be mounted to a planetary servo gear unit. In case a motor needs to be replaced, the adapter flange can be exchanged in just a few steps at a later time.

In general, the gear units can also be delivered without adapter flange, so that a suitable adapter flange is later attached when the selected motor is mounted. The gear unit is always sealed, even without adapter flange. This prevents lubricant from leaking out of the gear unit and foreign particles from ingressing.

2.1.7 Corrosion resistance

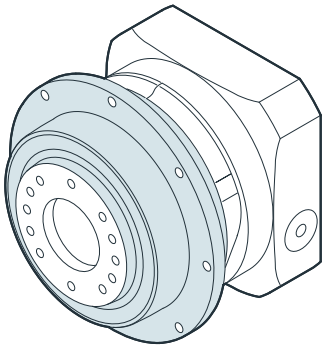

In the standard design, the housing surfaces of the gear unit are already corrosion protected and provide protection against influences in industrial environments. Common coating procedures such as painting are not required.

Especially interfaces toward the application, such as gear unit centering and flange contact surfaces, are corrosion-resistant in the standard design.

27781410/EN – 03/2022

2.2 Added value with the modular concept of P5.G to P7.G

SEW-EURODRIVE – your contact for servo technology

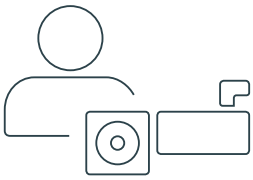

In contrast to many other manufacturers of servo gear units on the market, we at SEW-EURODRIVE understand ourselves to be a supplier of complete solutions for the entire drive train. This includes everything ranging from the gear unit and motor, to cables, the servo inverter and the controller.

This is an advantage for the customer, as for example, the product properties of gear unit and motor can be optimally coordinated and their interactions can be taken into consideration during configuration/project planning.

- More than 90 years of experience in the field of drive technology
- We provide solutions for the entire world of drive technology
- Global network with more than 19 000 employees worldwide

Ready for the future with Industry 4.0

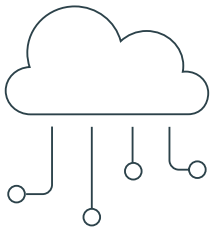

As delivery times get shorter and shorter, and the modular system offers a high variance, new and flexible concepts are required for production and assembly.

Intelligent procedures and processes are being coordinated so that we can achieve a standard delivery time of 5 days. The focused implementation of lean principles and Industry 4.0 approaches paves the way for perfectly networked, modular and highly efficient production – even in a batch size of one.

SEW-EURODRIVE has a significant procurement volume of steel, seals, bearings, and other materials, which makes us an important customer in many industries. Reliable delivery is an important factor for selecting suppliers.

High production capacities in all plants, as well as a high global turnover of materials, allow for brief production and assembly times, even when the demand on the markets is high.

- Short delivery times
- High availability and rapid re-procurement
- Consistently high quality standards for series and individual products

27781410/EN – 03/2022

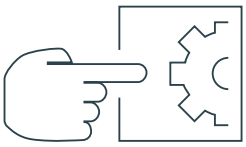

Leading innovator for details – long service life

Due to industrial partnerships with large manufacturers/suppliers we can obtain a high level of innovation during development and realization of new products.

Therefore, components and parts can be used for the PxG® planetary servo gear units that were especially developed in collaboration with our industrial partners to be used in planetary gear units. This ensures that the promised service life of gearing, lubricants and sealing elements are met.

- Availability of the latest technologies
- Use of exclusive machine elements (bearings, sealing systems, lubricants, etc.)
- Continuously long product service life

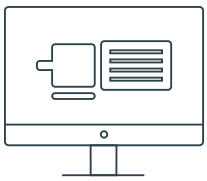

Technical product excellence – compactness

Many new possibilities of simulation and calculation support the development and construction process from the very beginning. This is the basis for a continuously high level of transparency throughout the individual development steps.

The result is a compact design that, combined with the latest production processes, allows for high torques with very small installation spaces.

In addition, the hardened gearing in the annulus gear ensures a constant rotational clearance throughout the entire service life, even when the gear unit is subjected to the highest loads. The promised product properties could be confirmed in comprehensive tests and runs at the test stand.

- High power density over a long service life
- Constant operating behavior throughout the life cycle
- Tried and tested, digital twin (a digital copy of the real product) available, simulations can be performed easily

27781410/EN – 03/2022

Versatile and flexible

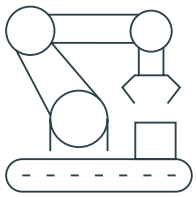

In the performance classes 5 to 7, the PxG® planetary servo gear units provide you with multiple options, each as 3-stage version. These options can be selected in virtually any combination.

To provide the optimal application, various adjustment possibilities are available, such as different output bearings, classes of rotational clearance, lubricants, seals and adapter designs.

- Scalable modular system
- A broad range of options to find the right solution
- Geometrical compatibility with the market standard

GearOil by SEW-EURODRIVE

By using high-quality base oils and the latest additives, the lubricants from the SEW-EURODRIVE GearOil series increase the performance of gear units. The oil reduces friction at rolling and sliding contact surfaces, thus increasing the efficiency and the durability against wear.

Another important aspect is the compatibility with the sealing materials, surfaces and coatings in the product.

All this contributes to a coordinated system for maximum service life.

Sealing system with Premium Sine Seal

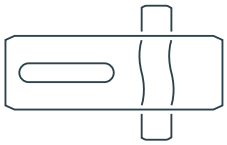

The novel oil seal stands out with a sinusoidal sealing lip.

The special sealing geometry generates a local pumping motion of the lubricant that reduces the temperature in the sealing gap, and in this way increases the service life of the elastomer.

In comparison to standard systems on the market, the service life can be more than doubled by using Premium Sine Seal, even when operated at highest dynamics.

27781410/EN – 03/2022

2.3 Type designation

P5BG31-0004/R/S/0 HN08C01

P5BG31-0004/R/S/0 HN08C01			
P	Drive type	• Servo gear unit	
P**5**BG31-0004/R/S/0 HN08C01			
5	Performance class	• 5 = For high dynamics • 6 = For high average speeds • 7 = For high torques	
P5**B**G31-0004/R/S/0 HN08C01			
B	Shaft-hub connection	• N = Smooth solid shaft • B = Flange block (without index bore) • C = Flange block (with index bore)	• K = Solid shaft with keyway • V = Splined solid shaft
P5B**G**31-0004/R/S/0 HN08C01			
G	Gear unit design	• G = Planetary gear unit	
P5BG**3**1-0004/R/S/0 HN08C01			
3	Size	• 2 = Size 2 • 3 = Size 3 • 4 = Size 4 • 5 = Size 5 • 6 = Size 6 • 7 = Size 7	
P5BG3**1**-0004/R/S/0 HN08C01			
1	Number of stages	• 1 = 1 stage • 2 = 2 stages • 3 = 3 stages	
P5BG31-**0004**/R/S/0 HN08C01			
0004	Gear ratio	• 0003: i = 3 • 0004: i = 4 • 0005: i = 5	• 005X: i = 5.5 ... • 1000: i = 1000 • 0000: i = Special gear ratio
P5BG31-0004/**R**/S/0 HN08C01			
R	Rotational clearance	• N = Standard • R = Reduced • X = Special rotational clearance	
P5BG31-0004/R/**S**/0 HN08C01			
S	Lubricant types	• S = Synthetic oil • F = Food-grade lubricant (oil) • G = Synthetic grease • H = Food-grade lubricant (grease)	
P5BG31-0004/R/S/**0** HN08C01			
0	Customer-specific	• 0 = Standard • X = Special design	

27781410/EN – 03/2022

P5BG31-0004/R/S/0 **HN**08C01			
H.	Shaft and clamping ring design	• HN = Rigid shaft with clamping ring • HB = Shaft with metal bellows coupling and clamping ring • HL = Rigid shaft with clamping ring with optimized mass inertia • HC = Shaft with metal bellows coupling and clamping ring with optimized mass inertia	
P5BG31-0004/R/S/0 HN**08**C01			
08	Size of adapter shaft and flange	• 00 = Adapter shaft, without flange • 01 = Geometry variant 01	• 08 = Geometry variant 08 • X = Special dimensions
P5BG31-0004/R/S/0 HN08**C**01			
C	Coupling sleeve	• . = Without coupling sleeve • C = Coupling sleeve Ø -3 mm • D = Coupling sleeve Ø -4 mm • E = Coupling sleeve Ø -5 mm	• F = Coupling sleeve Ø -6 mm • G = Coupling sleeve Ø -7 mm • H = Coupling sleeve Ø -8 mm …
P5BG31-0004/R/S/0 HN08C**01**			
01	Flange code number	• 01 = Flange square dimension 1 • 02 = Flange square dimension 2 • 03 = Flange square dimension 3	• 04 = Flange square dimension 4 … • X = Special dimensions

27781410/EN – 03/2022

2.4 Nameplate

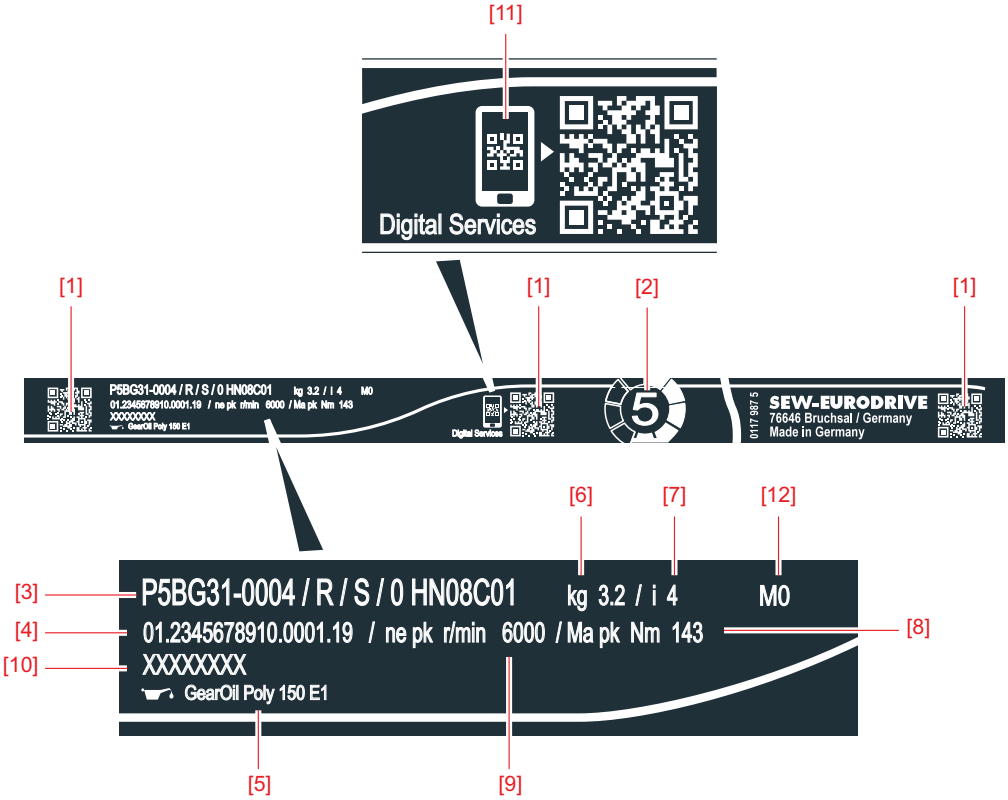

	Information
[1]	• Data matrix code
[2]	• Performance class
[3]	• Type designation
[4]	• Serial number
[5]	• Lubricant
[6]	• Weight
[7]	• Gear ratio
[8]	• Peak torque, output end
[9]	• Peak speed, input end
[10]	• Customer-specific designation (optional)
[11]	• Digital Services
[12]	• Mounting position

27781410/EN – 03/2022

2.5 Gear unit designs and options

Output shaft

	P5	P6	P7
Flange block P.BG	S	S	S
Flange block with index bore P.CG	O	O	-
Solid shaft P.NG	S	S	-
Solid shaft with key P.KG	O	O	-
Multiple-spline shaft P.VG	O	O	-

S = standard, O = optional, - = not available

Adapter

	P5	P6	P7
Clamping ring with optimized mass inertia	O	O	O
Without plate (adapter flange)	O	O	O
Metal bellows coupling	O	S	O

S = standard, O = optional

Lubricants

	P5	P6	P7
Synthetic oil	S	S	S
Synthetic oil for the food industry	O	O	O
Synthetic grease	-	O	-
Synthetic grease for the food industry	-	O	-

S = standard, O = optional, - = not available

Further options

	P5	P6	P7
With reduced backlash	O	O	S
Stainless steel output shaft	O	O	O

S = standard, O = optional

27781410/EN – 03/2022

2.6 Overview of torques

Sample depiction of the peak torque of servo gear units in performance class 5 based on the example of 1-stage and 2-stage gear units in the output designs with smooth solid shaft [1] and flange block [2]. To aid readability, 3-stage gear units are not shown.

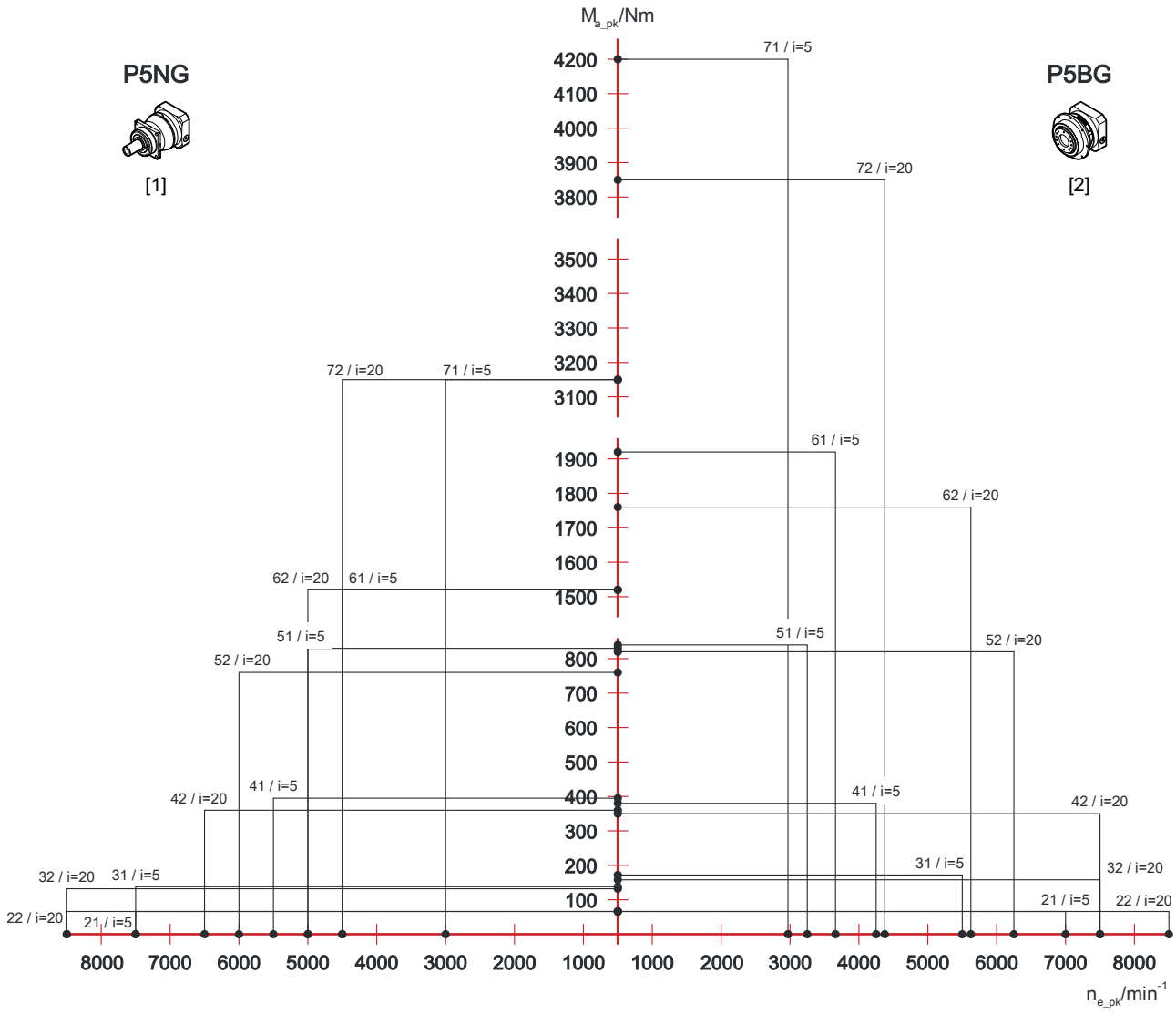

27781410/EN – 03/2022

Sample depiction of the nominal torque in performance class 6 and in the output designs with smooth solid shaft [1] and flange block [2].

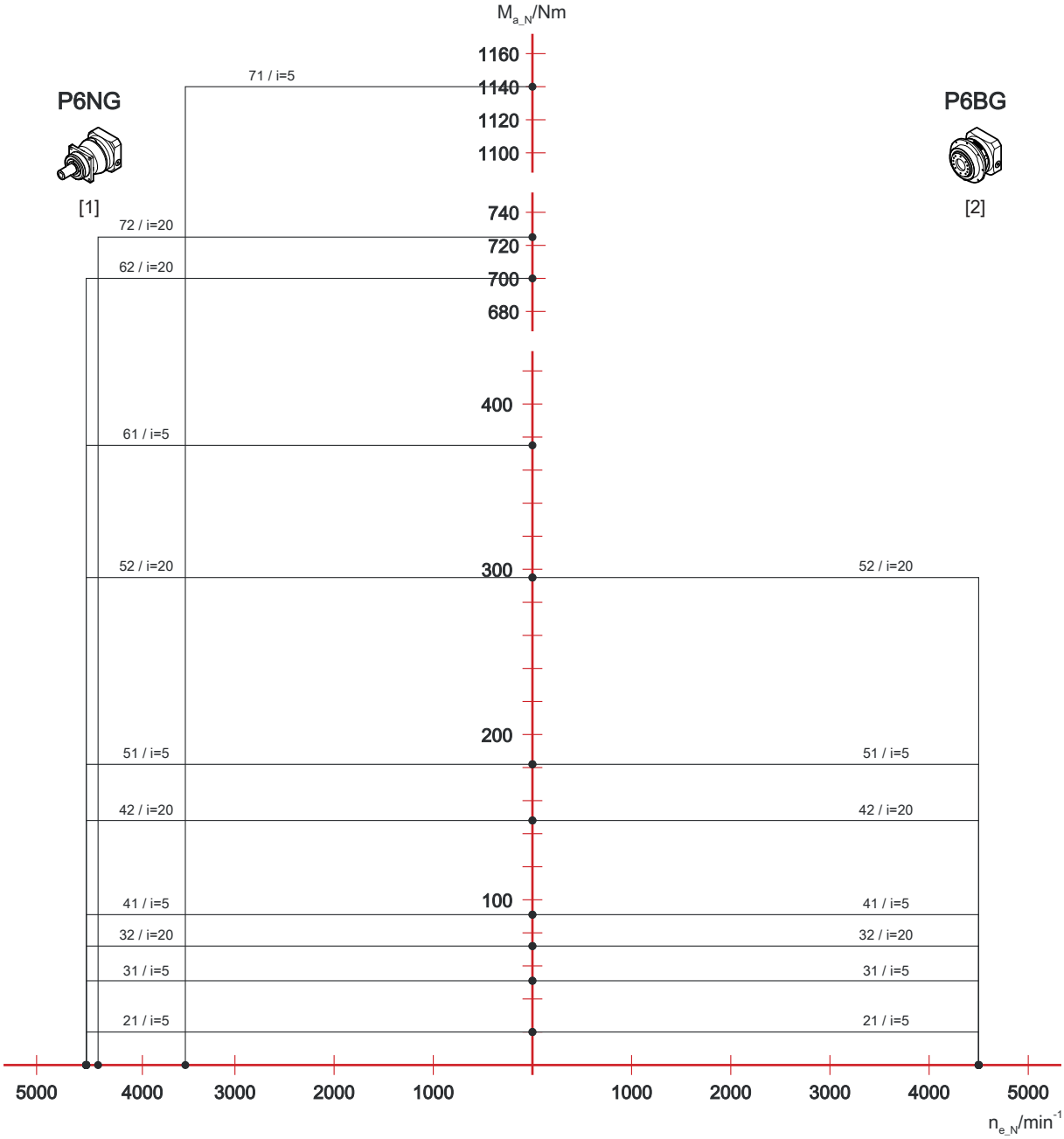

Sample depiction of the peak torque in performance class 7 based on the example of 1-stage and 2-stage gear units in the output design with flange block. To aid readability, 3-stage gear units are not shown.

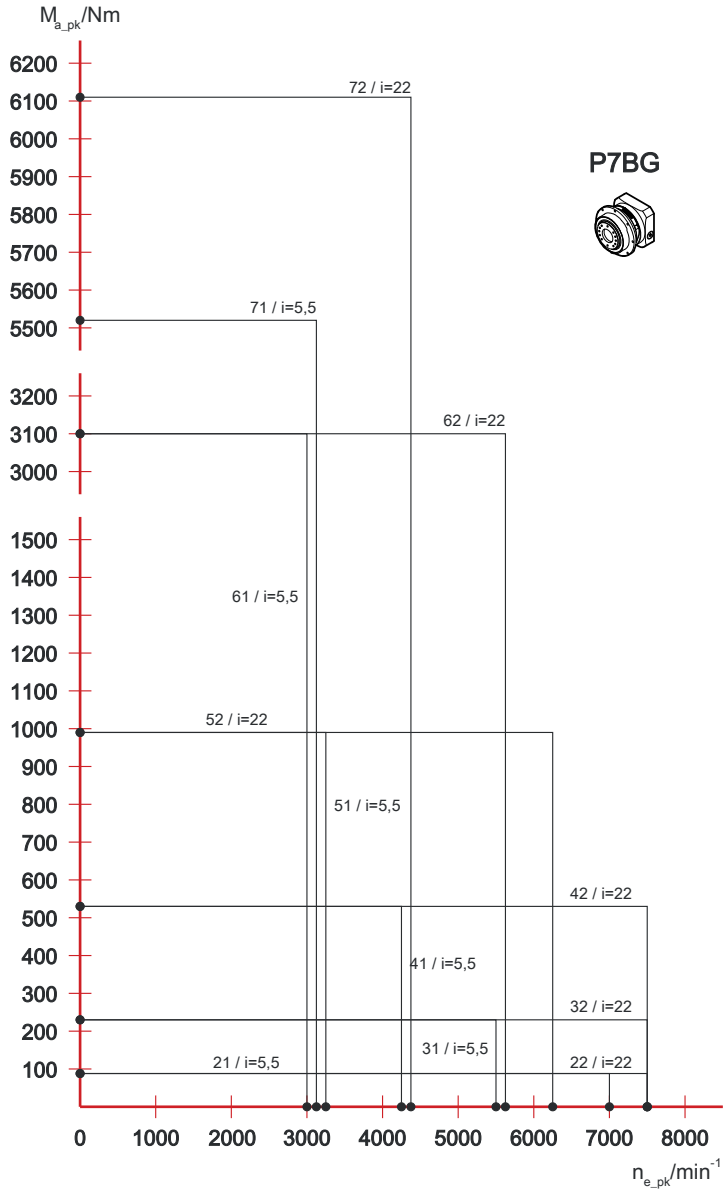

SEW
EURODRIVE

3 Servo gear units of the type P5.G

The servo gear units in performance class 5 are especially suitable for dynamic applications in intermittent duty with a high switching frequency.

The helical gearing ensures a high running smoothness and uniformity.

Gear units in performance class 5 have the following, outstanding properties:

- High degree of standardization

  Broad range of possible applications and high compatibility with the market standard.

- High dynamics

  Optimized for many load changes and high switching frequency while the level of precision is maintained.

- Variety of options

  Flexible combinations for a wide range of applications.

The following shaft-hub connections (output designs) are available for servo gear units of the type P5.G:

- N: Smooth solid shaft
- K: Solid shaft with keyway
- V: Splined solid shaft
- B: Flange block (without index hole)
- C: Flange block (with index hole)

Sample depiction of the torque characteristic (nominal torque to peak torque) in performance class 5. Solid shaft and flange block 1-stage i = 5, 2-stage i = 25. To aid readability, 3-stage gear units are not shown.

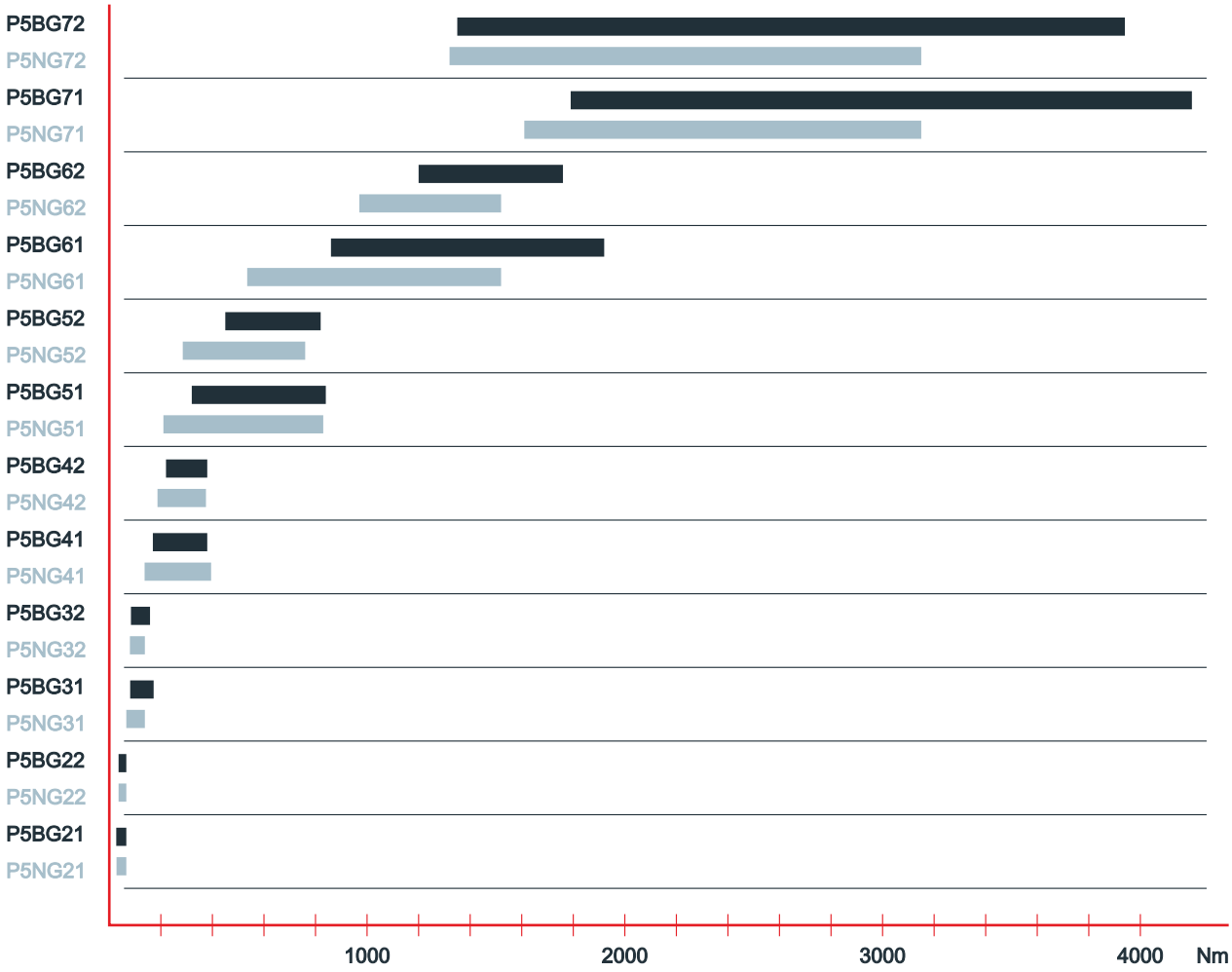

The permitted speeds are between 2500 and 8000 min^{-1}. For detailed information, refer to the technical data (▸ 38).

27781410/EN – 03/2022

3.1 Possible use and target applications

3.1.1 Machine tool gantry

Gantry robots are being used whenever an application needs to transport workpieces from one machine tool to the next. This makes it possible to realize a high degree of freedom with several moving axes. With the planetary servo gear units of the type P5.G, the application can have a robust and low-maintenance structure.

Features of P5.G

- Compact design
- High dynamics
- Constant precision during the entire service life

Your benefits

- Very compatible for integration of various servomotors due to flexible possibilities for motor mounting
- Short cycle times at reliably high radial loads and high accelerations
- Safe connection of transmission elements ensured by the splined output shaft (P5VG)

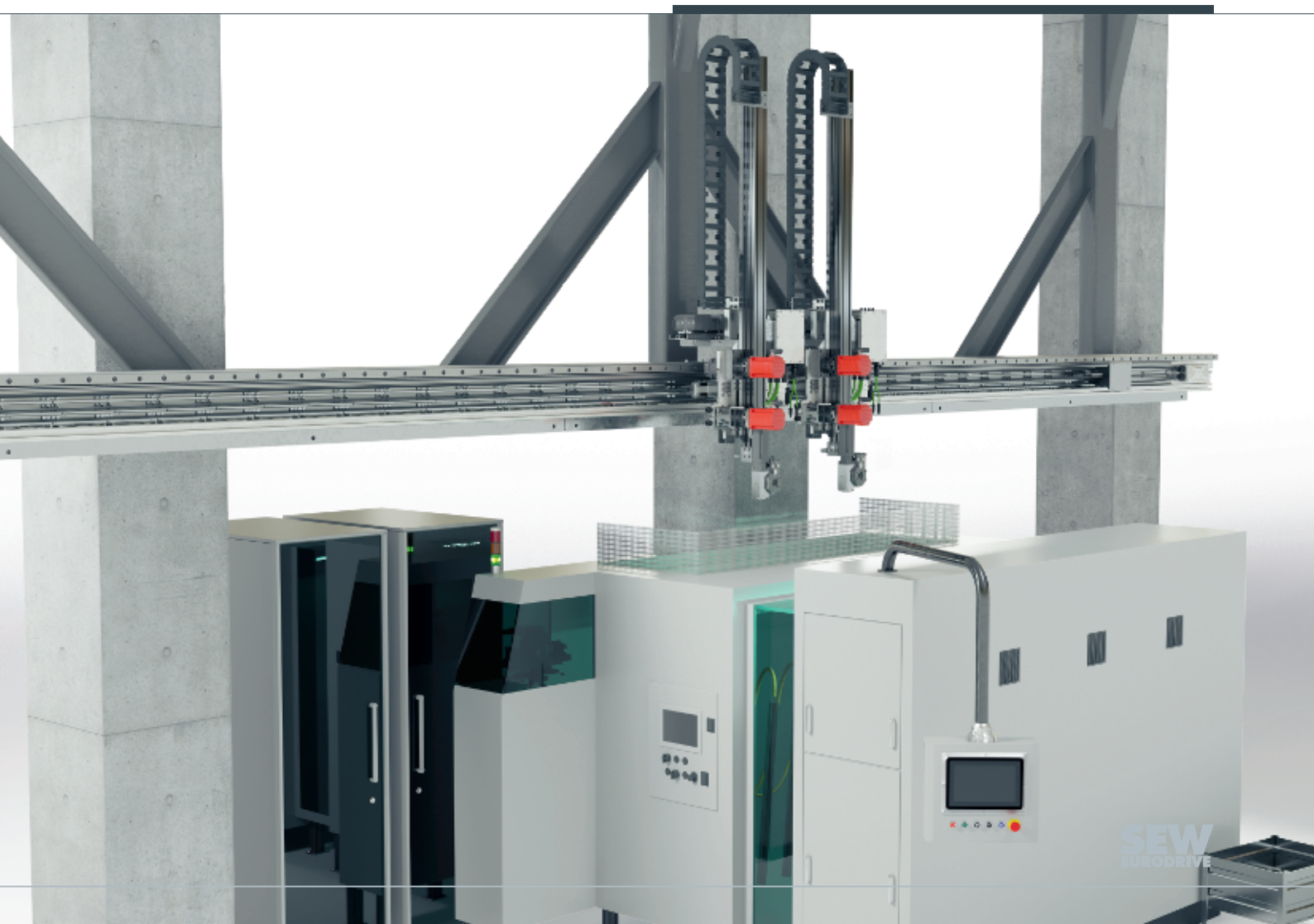

3.1.2 Mounting press

The workpieces must be passed through several work stations. At each work station, a different pressing operation is performed. In addition to the required high dynamics and constant precision, versatility is also essential when workpiece and pressing operation are changed. Planetary servo gear units of the type P5.G are the ideal solution to ensure all this.

Features of P5.G

- Variable and versatile due to the modular concept
- A compact design with concurrently high torques is the basis for space-saving machine and mounting concepts
- High dynamics and constant precision during the entire service life

Your benefits

- The compact design facilitates space-saving concepts for machines and installation, while it also allows for high torque
- Flexible feed rates and feed forces due to a broad range of gear ratios
- Scalable assembly forces due to graduated torques of the available sizes

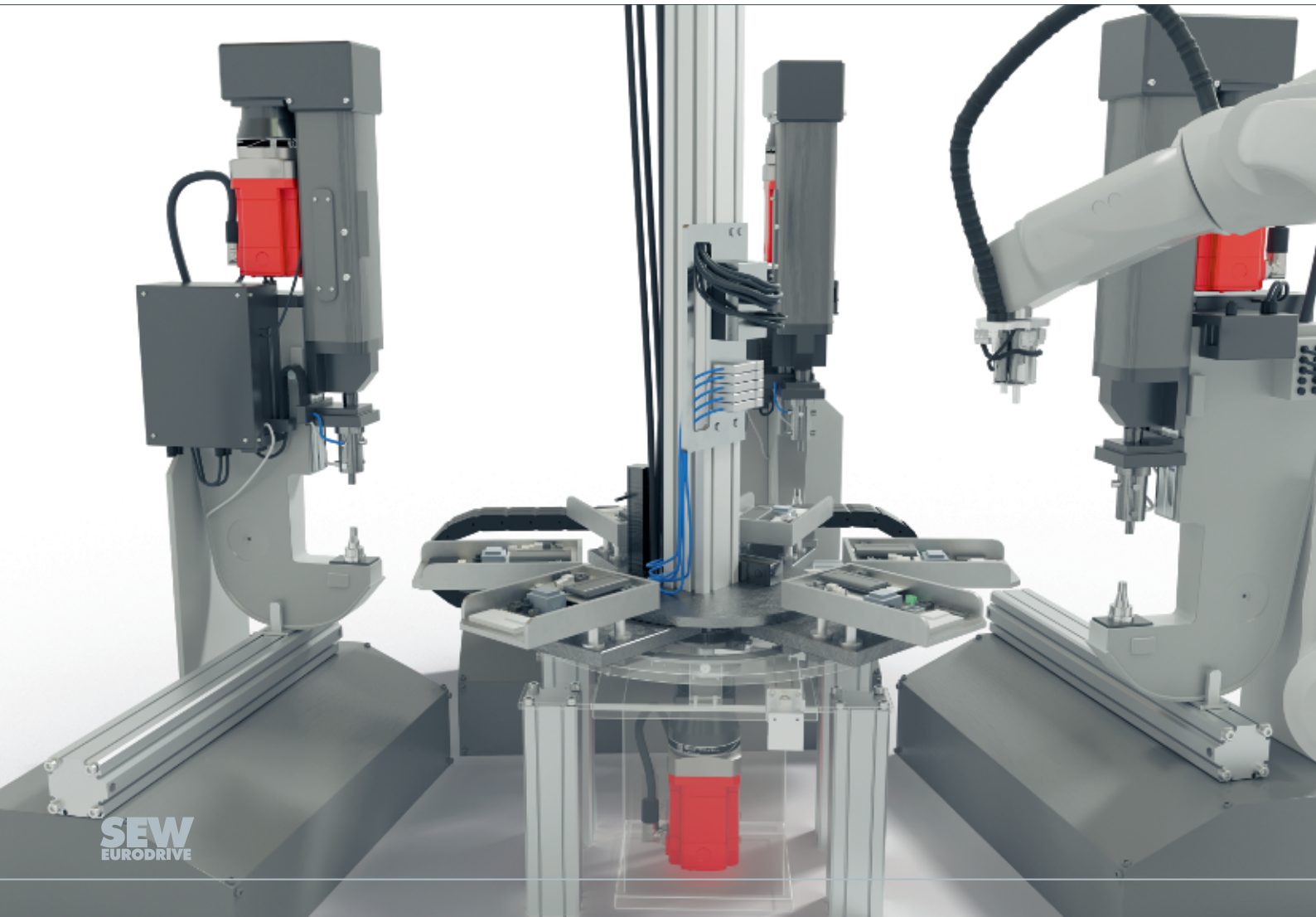

3.1.3 Drilling and pegging machine

The workpiece is positioned and processed in a wood processing machine. In this example, possible processing steps are drilling and inserting dowel pins. The tool must be positioned precisely and with high dynamics. Planetary servo gear units of the type P5.G are the optimal solution to ensure all this.

Features of P5.G

- Precise and dynamic throughout the entire service life
- The torque density of the planetary servo gear unit allows for compact machine structures
- A large variety of options makes variable machine constructions possible

Your benefits

- High contour accuracy of the working pieces while the surface quality is ensured by the exceptional synchronism and constant rotational clearance
- Consistently high product quality due to low manufacturing tolerances in the application that is used for exact positioning and provides a high level of precision

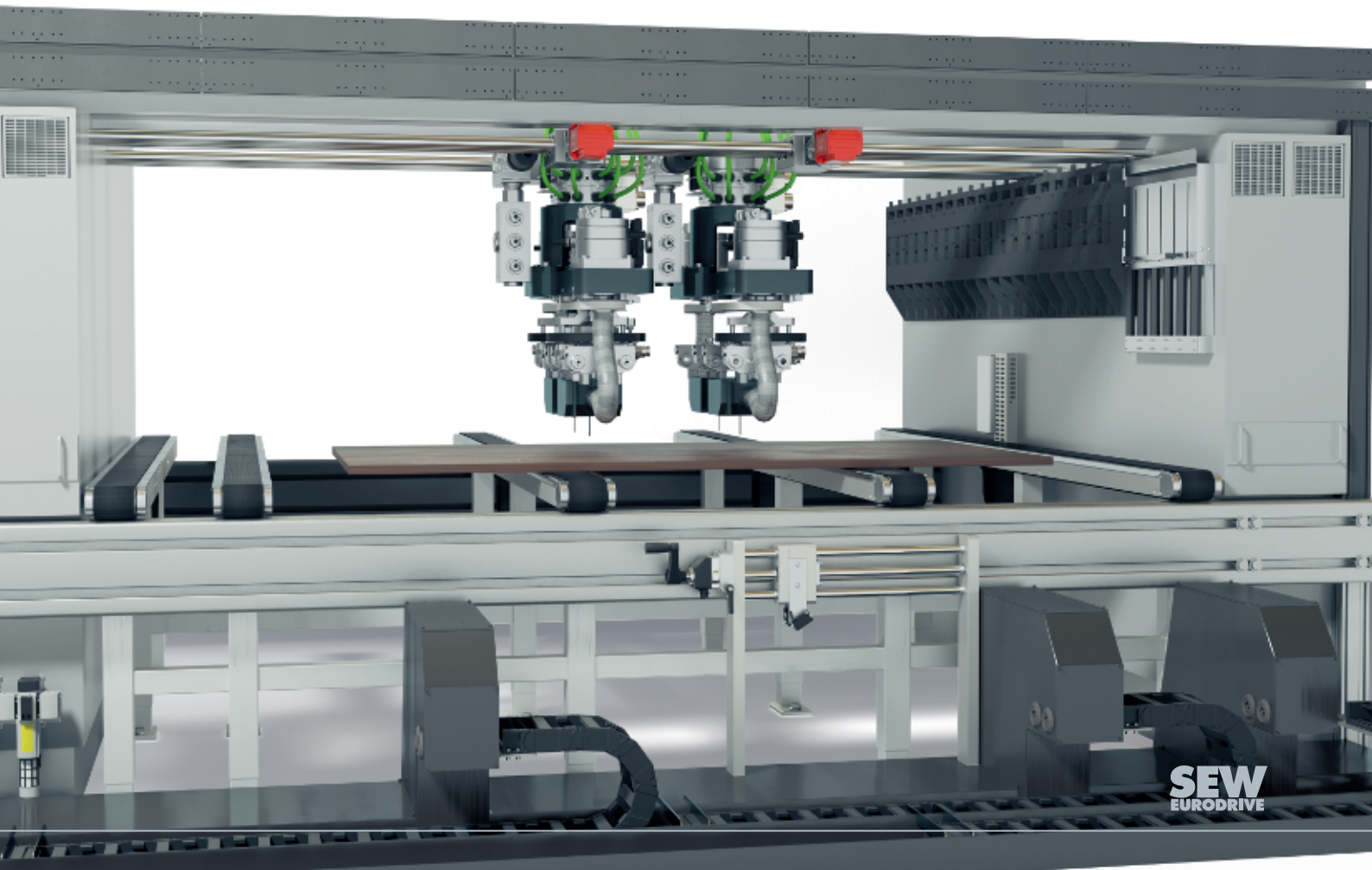

3.2 Technical data and dimension sheets

For further information regarding the technical data and dimension sheets, refer to chapter "Appendix" (▶ 261).

			P5BG21			
Gear ratio			**4**	**5**	**7**	**10**
Short-time duty						
Peak torque	M_{a_pk}	Nm	66	66	60	42
Peak motor speed	n_{e_pk}	min^{-1}	5600	7000	7500	7500
Peak radial force	$F_{R_a_pk}$	N	2000	2000	2000	2000
Peak axial force	$F_{A_a_pk}$	N	2100	2100	2100	2100
Peak breakdown torque	$M_{K_a_pk}$	Nm	110	110	110	110
Continuous duty						
Nominal torque	M_{a_N}	Nm	27	27	27	27
Nominal motor speed	n_{e_N}	min^{-1}	4000	4000	4000	4000
Nominal radial force	$F_{R_a_N}$	N	1270	1350	1500	1670
Nominal axial force	$F_{A_a_N}$	N	1780	1780	1780	1780
Nominal breakdown torque	$M_{K_a_N}$	Nm	73	78	86	93
General technical data						
Torsional rigidity	c_{tr}	Nm/ arcmin	16	14	11	7
Rotational clearance	φ	arcmin	≤ 2 (R) – 4 (N)			
Pull-out rigidity	c_{pr}	Nm/ arcmin	111			
Service life	L	h	> 20000			
Cyclic duration factor	ED	%	≤ 60			
Gear unit temperature	T_{max}	°C	90			
Ambient temperature	T_{amb}	°C	-15 – +40			
Nominal ambient temperature	T_{amb_N}	°C	20			
Efficiency	η	%	98	98	98	98
Sound pressure level	L_P	dB (A)	≤ 58	≤ 58	≤ 58	≤ 58
Degree of protection	–	–	IP65			
No-load speed	M_{e_0}	Nm	0.56	0.48	0.37	0.31
Emergency stop torque	M_{a_es}	Nm	100	100	100	90
Mass moment of inertia incl. adapter						
Coupling Ø 11 mm	J	10^{-4} kgm^2	0.16	0.12	0.09	0.08
Coupling Ø 14 mm	J	10^{-4} kgm^2	0.30	0.26	0.23	0.22
Coupling Ø 19 mm	J	10^{-4} kgm^2	0.53	0.49	0.46	0.45
Mass incl. adapter						
Coupling Ø min – max	m	kg	1.30 – 2.23			

27781410/EN – 03/2022

P5BG21..

57 041 00 19

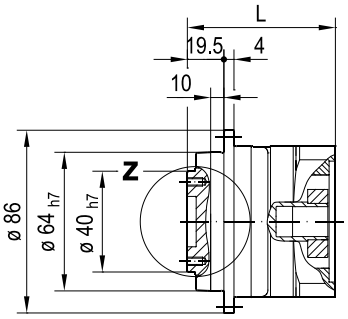

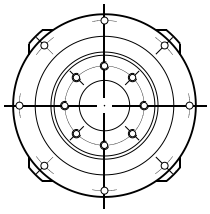

PxBG

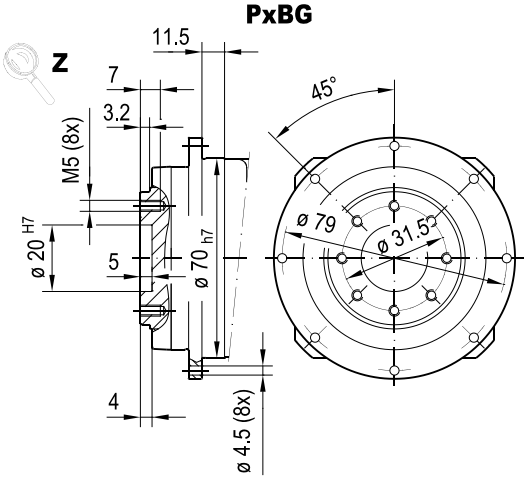

PxCG

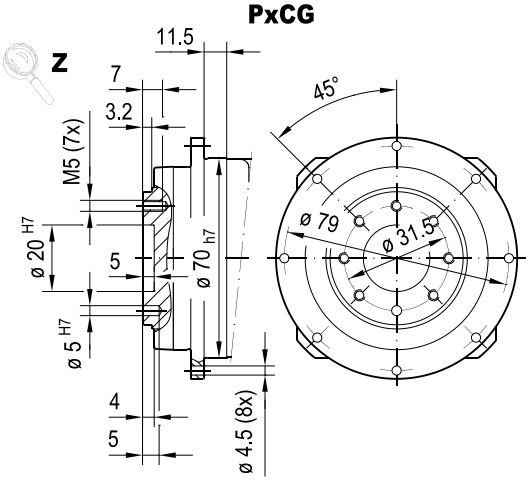

min. □ 73 **Fig. B**

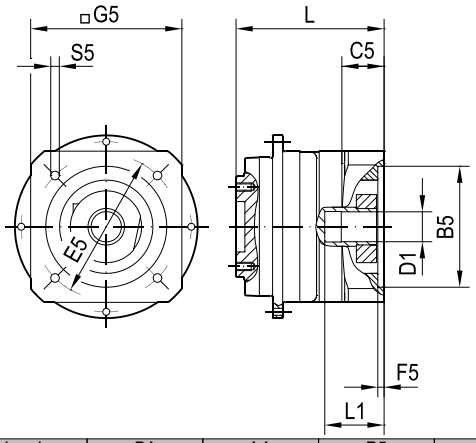

min. □ 95 **Fig. C**

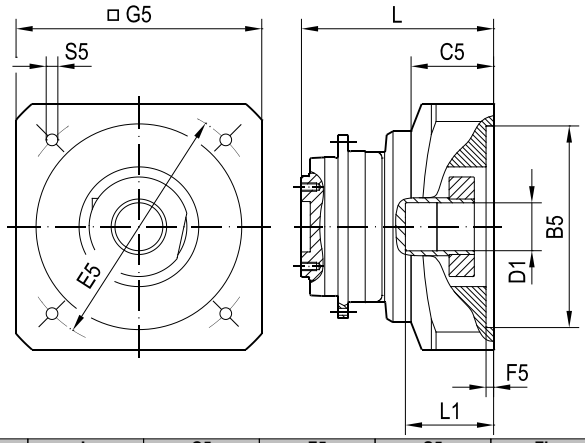

(→ ■ -)	D1	L1	B5	E5	G5	L	C5	F5	S5	Fig.
H.01.02	11	37.6	40	63	73	78	22.3	0	M4x12	B
H.02.03	11	37.6	60	75	73	78	22.3	3.5	M5x12	B
H.03.02	11	37.6	60	90	73	78	22.3	3.5	M5x12	B
H.04.02	14	37.4	50	95	95	81	25.2	3.5	M6x15	B
H.05.02	14	37.4	60	75	73	81	25.2	3.5	M6x15	B
H.06.02	14	37.4	80	100	95	81	25.2	4	M6x15	B
H.06.05	14	37.4	80	100	88	81	25.2	4	M6x15	B
H.07.01	14	37.4	60	75	73	81	25.2	3.5	M5x12	B
H.08.01	19	42	80	100	95	88	28	4	M6x15	C
H.09.01	19	42	95	115	105	88	28	4	M8x18	C
H.10.01	19	42	95	130	120	88	28	4	M8x18	C
H.11.01	19	42	110	130	120	88	28	4	M8x18	C
H.32.01	14	37.4	60	82	73	81	25.2	3.5	M5x12	B

27781410/EN – 03/2022

			P5BG22								
Gear ratio			**16**	**20**	**25**	**28**	**35**	**40**	**50**	**70**	**100**
Short-time duty											
Peak torque	M_{a_pk}	Nm	66	66	66	66	66	66	66	60	42
Peak motor speed	n_{e_pk}	min^{-1}	8500	8500	8500	8500	8500	8500	8500	8500	8500
Peak radial force	$F_{R_a_pk}$	N	2000	2000	2000	2000	2000	2000	2000	2000	2000
Peak axial force	$F_{A_a_pk}$	N	2100	2100	2100	2100	2100	2100	2100	2100	2100
Peak breakdown torque	$M_{K_a_pk}$	Nm	110	110	110	110	110	110	110	110	110
Continuous duty											
Nominal torque	M_{a_N}	Nm	48	48	48	48	48	48	48	48	36
Nominal motor speed	n_{e_N}	min^{-1}	5500	5500	5500	5500	5500	5500	5500	5500	5500
Nominal radial force	$F_{R_a_N}$	N	1700	1700	1700	1700	1700	1700	1700	1700	1700
Nominal axial force	$F_{A_a_N}$	N	1780	1780	1780	1780	1780	1780	1780	1780	1780
Nominal breakdown torque	$M_{K_a_N}$	Nm	93	93	93	93	93	93	93	93	93
General technical data											
Torsional rigidity	c_{tr}	Nm/ arcmin	17	17	15	16	15	15	14	12	8
Rotational clearance	φ	arcmin	≤ 2 (R) – 4 (N)								
Pull-out rigidity	c_{pr}	Nm/ arcmin	111								
Service life	L	h	> 20000								
Cyclic duration factor	ED	%	≤ 60								
Gear unit temperature	T_{max}	°C	90								
Ambient temperature	T_{amb}	°C	-15 – +40								
Nominal ambient temperature	T_{amb_N}	°C	20								
Efficiency	η	%	94	94	94	94	94	94	94	94	94
Sound pressure level	L_P	dB (A)	≤ 57	≤ 57	≤ 57	≤ 57	≤ 57	≤ 57	≤ 57	≤ 57	≤ 57
Degree of protection	–	–	IP65								
No-load speed	M_{e_0}	Nm	0.28	0.23	0.22	0.21	0.17	0.18	0.17	0.17	0.16
Emergency stop torque	M_{a_es}	Nm	100	100	100	100	100	100	100	100	90
Mass moment of inertia incl. adapter											
Coupling Ø 11 mm	J	10^{-4} kgm^2	0.10	0.09	0.09	0.07	0.07	0.07	0.07	0.07	0.07
Coupling Ø 14 mm	J	10^{-4} kgm^2	0.25	0.23	0.23	0.22	0.22	0.21	0.21	0.21	0.21
Mass incl. adapter											
Coupling Ø min – max	m	kg	1.76 – 2.13								

27781410/EN – 03/2022

P5BG22..

57 042 00 19

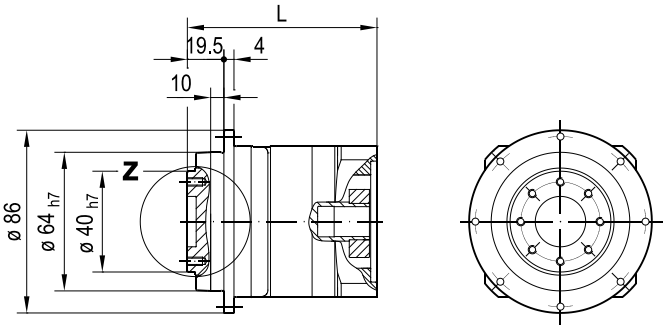

PxBG

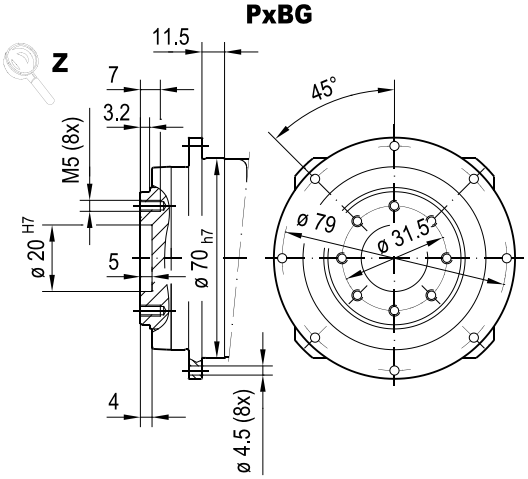

PxCG

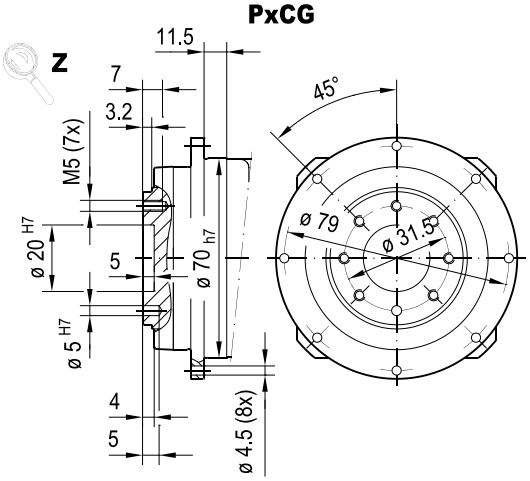

min. □ 55 Fig. A

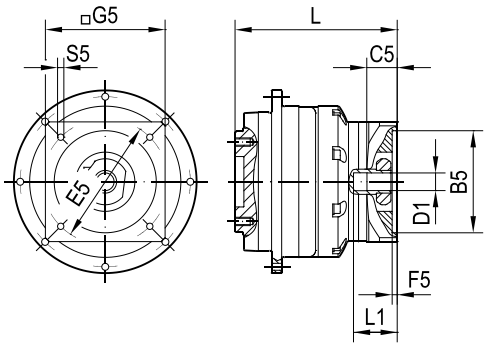

min. □ 73 Fig. B

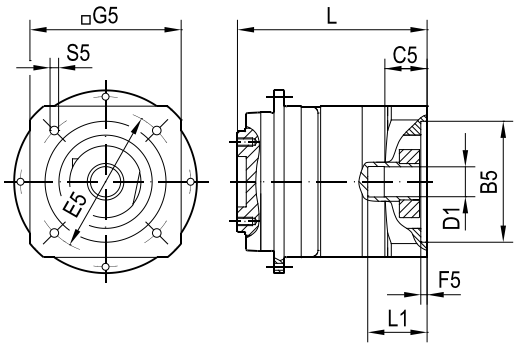

(→ 📖 -)	D1	L1	B5	E5	G5	L	C5	F5	S5	Fig.
H.01.03	11	37.6	40	63	55	101	19.7	3.5	M4x12	A
H.02.04	11	37.6	60	75	62	101	19.7	3.5	M5x12	A
H.02.05	11	37.6	60	75	73	101	19.7	3.5	M5x12	A
H.03.03	11	37.6	60	90	73	101	19.7	3.5	M5x12	A
H.04.02	14	37.4	50	95	95	104	25.2	3.5	M6x15	B
H.05.02	14	37.4	60	75	73	104	25.2	3.5	M6x15	B
H.06.02	14	37.4	80	100	95	104	25.2	4	M6x15	B
H.06.05	14	37.4	80	100	88	104	25.2	4	M6x15	B
H.07.01	14	37.4	60	75	73	104	25.2	3.5	M5x12	B
H.32.01	14	37.4	60	82	73	104	25.2	3.5	M5x12	B

27781410/EN – 03/2022

			P5BG31			
Gear ratio			**4**	**5**	**7**	**10**
Short-time duty						
Peak torque	M_{a_pk}	Nm	172	172	172	126
Peak motor speed	n_{e_pk}	min^{-1}	4400	5500	7500	7500
Peak radial force	$F_{R_a_pk}$	N	3260	3260	3260	3260
Peak axial force	$F_{A_a_pk}$	N	2790	2790	2790	2790
Peak breakdown torque	$M_{K_a_pk}$	Nm	270	270	270	270
Continuous duty						
Nominal torque	M_{a_N}	Nm	84	81	81	81
Nominal motor speed	n_{e_N}	min^{-1}	2600	2900	3100	3100
Nominal radial force	$F_{R_a_N}$	N	2620	2720	2770	2770
Nominal axial force	$F_{A_a_N}$	N	2370	2370	2370	2370
Nominal breakdown torque	$M_{K_a_N}$	Nm	215	225	225	225
General technical data						
Torsional rigidity	c_{tr}	Nm/ arcmin	41	39	31	21
Rotational clearance	φ	arcmin	≤ 2 (R) – 4 (N)			
Pull-out rigidity	c_{pr}	Nm/ arcmin	269			
Service life	L	h	> 20000			
Cyclic duration factor	ED	%	≤ 60			
Gear unit temperature	T_{max}	°C	90			
Ambient temperature	T_{amb}	°C	-15 – +40			
Nominal ambient temperature	T_{amb_N}	°C	20			
Efficiency	η	%	97	97	97	97
Sound pressure level	L_P	dB (A)	≤ 57	≤ 57	≤ 57	≤ 57
Degree of protection	–	–	IP65			
No-load speed	M_{e_0}	Nm	1.30	1.10	0.84	0.64
Emergency stop torque	M_{a_es}	Nm	250	250	250	250
Mass moment of inertia incl. adapter						
Coupling Ø 14 mm	J	10^{-4} kgm^2	0.67	0.50	0.36	0.28
Coupling Ø 19 mm	J	10^{-4} kgm^2	0.89	0.73	0.59	0.51
Coupling Ø 24 mm	J	10^{-4} kgm^2	2.16	2.00	1.85	1.78
Mass incl. adapter						
Coupling Ø min – max	m	kg	3.12 – 6.13			

27781410/EN – 03/2022

P5BG31..

57 019 00 19

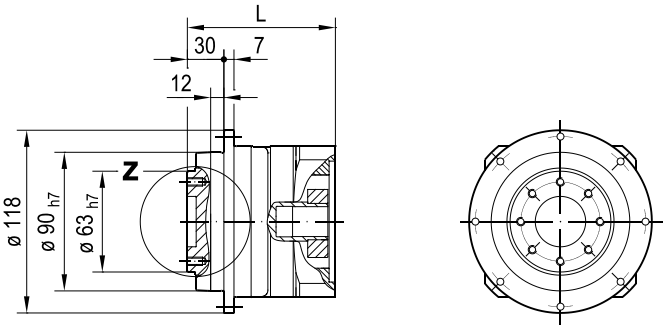

PxBG

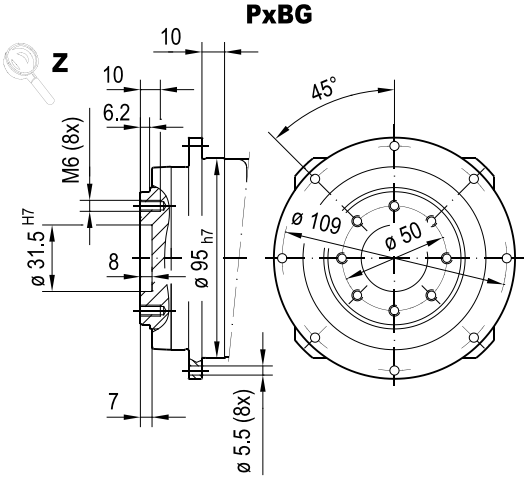

PxCG

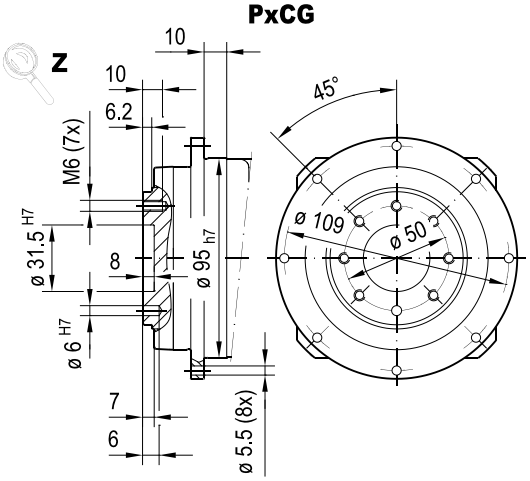

min. □ 95 Fig. B

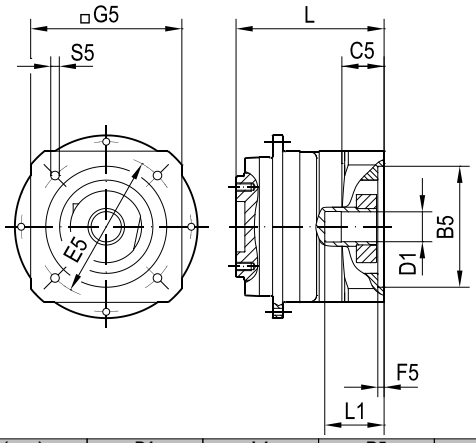

min. □ 120 Fig. C

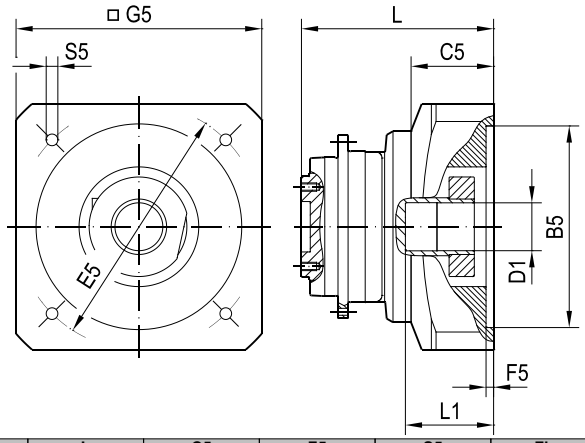

(→ ■ -)	D1	L1	B5	E5	G5	L	C5	F5	S5	Fig.
H.04.03	14	37.4	50	95	95	94	24.2	3.5	M6x15	B
H.05.03	14	37.4	60	75	95	94	24.2	3.5	M6x15	B
H.06.03	14	37.4	80	100	95	94	24.2	4	M6x15	B
H.07.02	14	37.4	60	75	95	94	24.2	3.5	M5x12	B
H.08.01	19	42	80	100	95	101	28	4	M6x15	B
H.09.01	19	42	95	115	105	101	28	4	M8x18	B
H.10.01	19	42	95	130	120	101	28	4	M8x18	B
H.11.01	19	42	110	130	120	101	28	4	M8x18	B
H.12.01	24	50	95	115	120	115	33.5	5	M8x18	C
H.13.01	24	50	95	130	120	115	33.5	5	M8x18	C
H.14.01	24	50	110	130	120	115	33.5	5	M8x18	C
H.15.01	24	51	110	165	143	117	35	5	M10x24	C
H.16.01	24	51	130	165	143	117	35	5	M10x24	C
H.16.03	24	51	130	165	140	117	35	5	M10x24	C
H.17.01	24	52	180	215	192	118	36	5	M10x24	C
H.32.02	14	37.4	60	82	95	94	24.2	3.5	M5x12	B

27781410/EN – 03/2022

			P5BG32								
Gear ratio			**16**	**20**	**25**	**28**	**35**	**40**	**50**	**70**	**100**
Short-time duty											
Peak torque	M_{a_pk}	Nm	157	126	158	157	158	154	158	157	105
Peak motor speed	n_{e_pk}	min^{-1}	7500	7500	7500	7500	7500	7500	7500	7500	7500
Peak radial force	$F_{R_a_pk}$	N	3260	3260	3260	3260	3260	3260	3260	3260	3260
Peak axial force	$F_{A_a_pk}$	N	2790	2790	2790	2790	2790	2790	2790	2790	2790
Peak breakdown torque	$M_{K_a_pk}$	Nm	270	270	270	270	270	270	270	270	270
Continuous duty											
Nominal torque	M_{a_N}	Nm	106	101	124	107	126	112	126	126	84
Nominal motor speed	n_{e_N}	min^{-1}	3500	3500	3500	3500	3500	3500	3800	4500	4500
Nominal radial force	$F_{R_a_N}$	N	2770	2770	2770	2770	2770	2770	2770	2770	2770
Nominal axial force	$F_{A_a_N}$	N	2370	2370	2370	2370	2370	2370	2370	2370	2370
Nominal breakdown torque	$M_{K_a_N}$	Nm	225	225	225	225	225	225	225	225	225
General technical data											
Torsional rigidity	c_{tr}	Nm/ arcmin	42	40	40	40	40	35	37	33	22
Rotational clearance	φ	arcmin	≤ 1 (R) – 3 (N)								
Pull-out rigidity	c_{pr}	Nm/ arcmin	269								
Service life	L	h	> 20000								
Cyclic duration factor	ED	%	≤ 60								
Gear unit temperature	T_{max}	°C	90								
Ambient temperature	T_{amb}	°C	-15 – +40								
Nominal ambient temperature	T_{amb_N}	°C	20								
Efficiency	η	%	94	94	94	94	94	94	94	94	94
Sound pressure level	L_P	dB (A)	≤ 55	≤ 55	≤ 55	≤ 55	≤ 55	≤ 55	≤ 55	≤ 55	≤ 55
Degree of protection	–	–	IP65								
No-load speed	M_{e_0}	Nm	0.56	0.48	0.44	0.40	0.28	0.32	0.32	0.24	0.25
Emergency stop torque	M_{a_es}	Nm	250	250	250	250	250	250	250	250	250
Mass moment of inertia incl. adapter											
Coupling Ø 11 mm	J	10^{-4} kgm^2	0.16	0.12	0.12	0.09	0.09	0.08	0.07	0.07	0.07
Coupling Ø 14 mm	J	10^{-4} kgm^2	0.30	0.27	0.26	0.24	0.23	0.22	0.22	0.22	0.21
Coupling Ø 19 mm	J	10^{-4} kgm^2	0.53	0.49	0.49	0.46	0.46	0.45	0.44	0.44	0.44
Mass incl. adapter											
Coupling Ø min – max	m	kg	3.46 – 4.44								

27781410/EN – 03/2022

P5BG32..

57 020 00 19

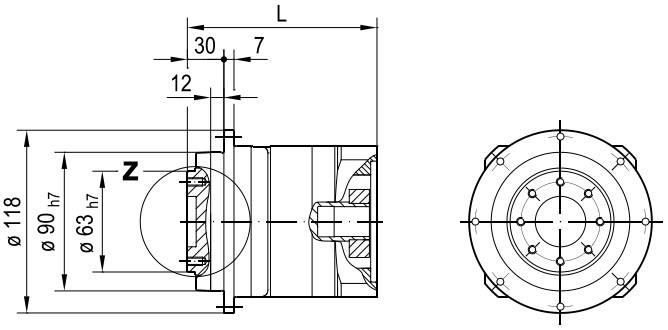

PxBG

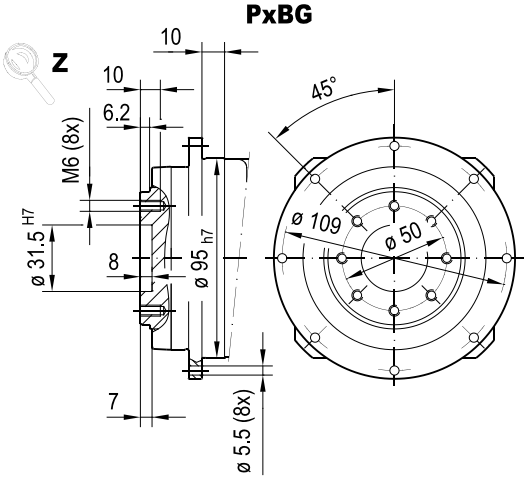

PxCG

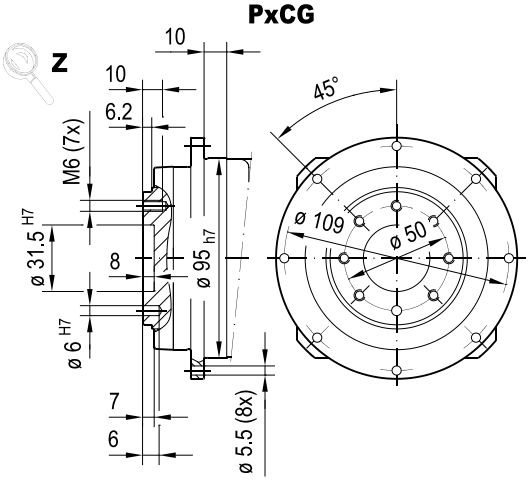

min. □ 73 Fig. A

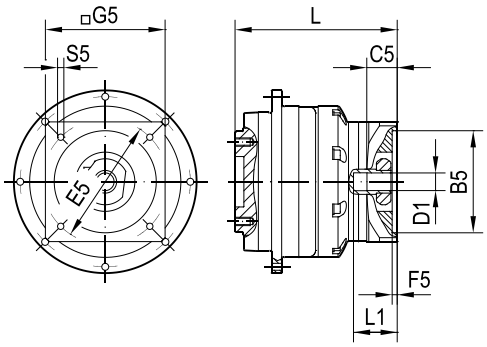

min. □ 95 Fig. B

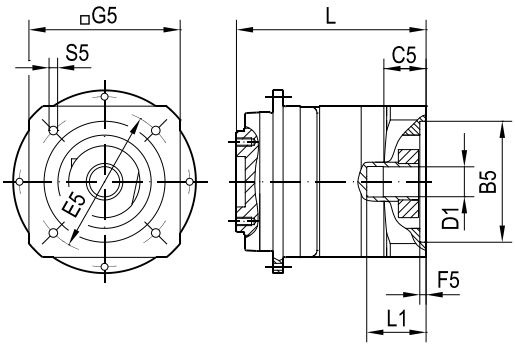

(→ ■ -)	D1	L1	B5	E5	G5	L	C5	F5	S5	Fig.
H.01.02	11	37.6	40	63	73	119	22.3	0	M4x12	A
H.02.03	11	37.6	60	75	73	119	22.3	3.5	M5x12	A
H.03.02	11	37.6	60	90	73	119	22.3	3.5	M5x12	A
H.04.02	14	37.4	50	95	95	122	25.2	3.5	M6x15	A
H.04.03	14	37.4	50	95	95	122	24.2	3.5	M6x15	B
H.05.02	14	37.4	60	75	73	122	25.2	3.5	M6x15	A
H.05.03	14	37.4	60	75	95	122	24.2	3.5	M6x15	B
H.06.03	14	37.4	80	100	95	122	24.2	4	M6x15	B
H.06.05	14	37.4	80	100	88	122	25.2	4	M6x15	A
H.07.01	14	37.4	60	75	73	122	25.2	3.5	M5x12	A
H.07.02	14	37.4	60	75	95	122	24.2	3.5	M5x12	B
H.08.01	19	42	80	100	95	130	28	4	M6x15	B
H.09.01	19	42	95	115	105	130	28	4	M8x18	B
H.10.01	19	42	95	130	120	130	28	4	M8x18	B
H.11.01	19	42	110	130	120	130	28	4	M8x18	B
H.32.01	14	37.4	60	82	73	122	25.2	3.5	M5x12	A
H.32.02	14	37.4	60	82	95	122	24.2	3.5	M5x12	B

27781410/EN – 03/2022

			P5BG33							
Gear ratio			**64**	**80**	**112**	**125**	**140**	**160**	**175**	**196**
Short-time duty										
Peak torque	M_{a_pk}	Nm	157	157	157	158	126	157	158	157
Peak motor speed	n_{e_pk}	min^{-1}	7500	7500	7500	7500	7500	7500	7500	7500
Peak radial force	$F_{R_a_pk}$	N	3260	3260	3260	3260	3260	3260	3260	3260
Peak axial force	$F_{A_a_pk}$	N	2790	2790	2790	2790	2790	2790	2790	2790
Peak breakdown torque	$M_{K_a_pk}$	Nm	270	270	270	270	270	270	270	270
Continuous duty										
Nominal torque	M_{a_N}	Nm	101	101	101	106	101	101	106	101
Nominal motor speed	n_{e_N}	min^{-1}	3500	3500	3500	3500	3500	3500	3500	3500
Nominal radial force	$F_{R_a_N}$	N	2770	2770	2770	2770	2770	2770	2770	2770
Nominal axial force	$F_{A_a_N}$	N	2370	2370	2370	2370	2370	2370	2370	2370
Nominal breakdown torque	$M_{K_a_N}$	Nm	225	225	225	225	225	225	225	225
General technical data										
Torsional rigidity	c_{tr}	Nm/ arcmin	43	43	43	41	42	43	41	41
Rotational clearance	φ	arcmin	≤ 2.5 (R) – 3 (N)							
Pull-out rigidity	c_{pr}	Nm/ arcmin	269							
Service life	L	h	> 20000							
Cyclic duration factor	ED	%	≤ 60							
Gear unit temperature	T_{max}	°C	90							
Ambient temperature	T_{amb}	°C	-15 – +40							
Nominal ambient temperature	T_{amb_N}	°C	20							
Efficiency	η	%	92	92	92	92	92	92	92	92
Sound pressure level	L_P	dB (A)	≤ 56	≤ 56	≤ 56	≤ 56	≤ 56	≤ 56	≤ 56	≤ 56
Degree of protection	–	–	IP65							
No-load speed	M_{e_0}	Nm	0.31	0.28	0.23	0.22	0.21	0.19	0.18	0.17
Emergency stop torque	M_{a_es}	Nm	250	250	250	250	250	250	250	250
Mass moment of inertia incl. adapter										
Coupling Ø 11 mm	J	10^{-4} kgm^2	0.10	0.09	0.07	0.09	0.07	0.07	0.07	0.07
Coupling Ø 14 mm	J	10^{-4} kgm^2	0.25	0.23	0.22	0.23	0.22	0.21	0.22	0.22
Mass incl. adapter										
Coupling Ø min – max	m	kg	3.93 – 4.31							

27781410/EN – 03/2022

P5BG33..

57 077 00 19

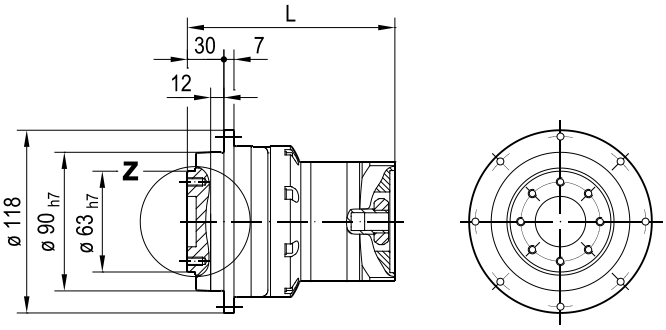

PxBG

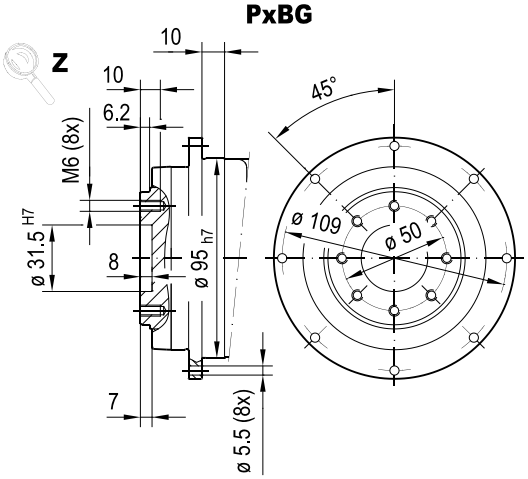

PxCG

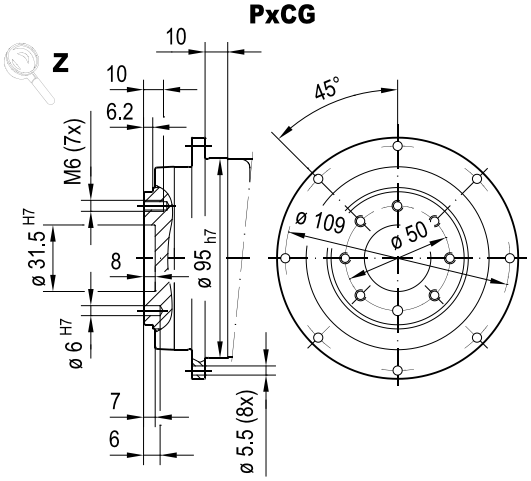

min. □ 55 Fig. A

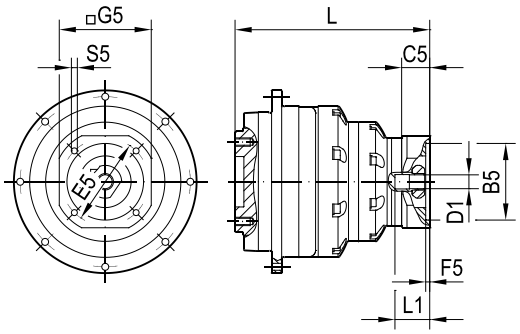

min. □ 73 Fig. B

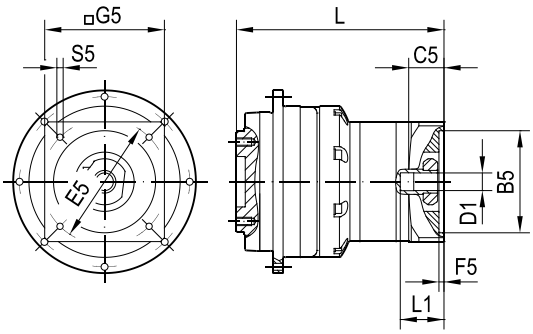

(→ ■ -)	D1	L1	B5	E5	G5	L	C5	F5	S5	Fig.
H.01.03	11	37.6	40	63	55	142	19.7	3.5	M4x12	A
H.02.04	11	37.6	60	75	62	142	19.7	3.5	M5x12	A
H.02.05	11	37.6	60	75	73	142	19.7	3.5	M5x12	A
H.03.03	11	37.6	60	90	73	142	19.7	3.5	M5x12	A
H.04.02	14	37.4	50	95	95	145	25.2	3.5	M6x15	B
H.05.02	14	37.4	60	75	73	145	25.2	3.5	M6x15	B
H.06.02	14	37.4	80	100	95	145	25.2	4	M6x15	B
H.06.05	14	37.4	80	100	88	145	25.2	4	M6x15	B
H.07.01	14	37.4	60	75	73	145	25.2	3.5	M5x12	B
H.32.01	14	37.4	60	82	73	145	25.2	3.5	M5x12	B

27781410/EN – 03/2022

			P5BG33							
Gear ratio			**200**	**245**	**250**	**280**	**350**	**400**	**500**	**700**
Short-time duty										
Peak torque	M_{a_pk}	Nm	126	158	158	157	158	154	158	157
Peak motor speed	n_{e_pk}	min^{-1}	7500	7500	7500	7500	7500	7500	7500	7500
Peak radial force	$F_{R_a_pk}$	N	3260	3260	3260	3260	3260	3260	3260	3260
Peak axial force	$F_{A_a_pk}$	N	2790	2790	2790	2790	2790	2790	2790	2790
Peak breakdown torque	$M_{K_a_pk}$	Nm	270	270	270	270	270	270	270	270
Continuous duty										
Nominal torque	M_{a_N}	Nm	101	106	106	101	106	101	106	90
Nominal motor speed	n_{e_N}	min^{-1}	3500	3500	3500	3500	3500	3500	3500	3500
Nominal radial force	$F_{R_a_N}$	N	2770	2770	2770	2770	2770	2770	2770	2770
Nominal axial force	$F_{A_a_N}$	N	2370	2370	2370	2370	2370	2370	2370	2370
Nominal breakdown torque	$M_{K_a_N}$	Nm	225	225	225	225	225	225	225	225
General technical data										
Torsional rigidity	c_{tr}	Nm/ arcmin	42	40	41	40	40	37	38	33
Rotational clearance	φ	arcmin	≤ 2.5 (R) – 3 (N)							
Pull-out rigidity	c_{pr}	Nm/ arcmin	269							
Service life	L	h	> 20000							
Cyclic duration factor	ED	%	≤ 60							
Gear unit temperature	T_{max}	°C	90							
Ambient temperature	T_{amb}	°C	-15 – +40							
Nominal ambient temperature	T_{amb_N}	°C	20							
Efficiency	η	%	92	92	92	92	92	92	92	92
Sound pressure level	L_P	dB (A)	≤ 56	≤ 56	≤ 56	≤ 56	≤ 56	≤ 56	≤ 56	≤ 56
Degree of protection	–	–	IP65							
No-load speed	M_{e_0}	Nm	0.17	0.15	0.15	0.14	0.13	0.12	0.10	0.09
Emergency stop torque	M_{a_es}	Nm	250	250	250	250	250	250	250	250
Mass moment of inertia incl. adapter										
Coupling Ø 11 mm	J	10^{-4} kgm^2	0.07	0.07	0.07	0.07	0.07	0.07	0.07	0.07
Coupling Ø 14 mm	J	10^{-4} kgm^2	0.21	0.22	0.21	0.21	0.21	0.21	0.21	0.21
Mass incl. adapter										
Coupling Ø min – max	m	kg	3.93 – 4.31							

27781410/EN – 03/2022

P5BG33..

57 077 00 19

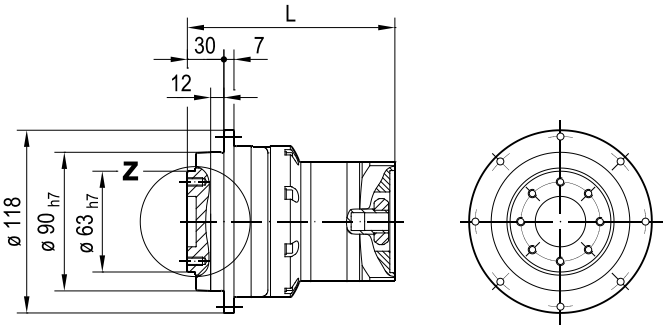

PxBG

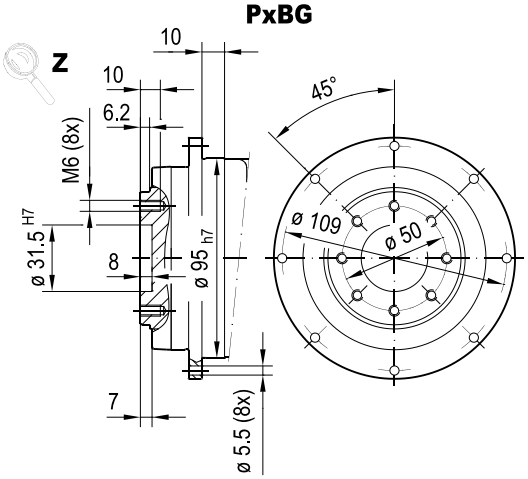

PxCG

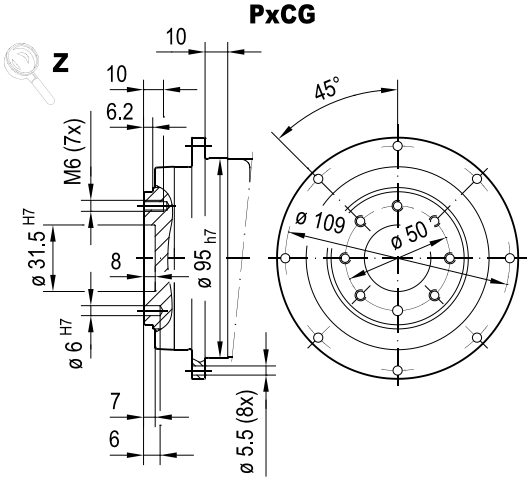

min. □ 55 **Fig. A**

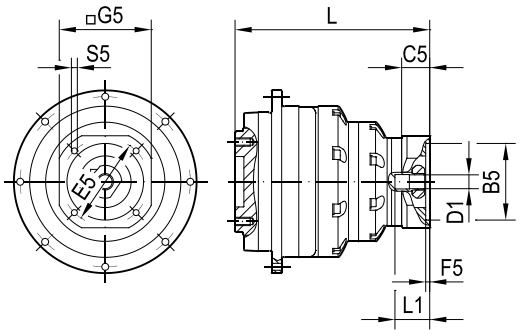

min. □ 73 **Fig. B**

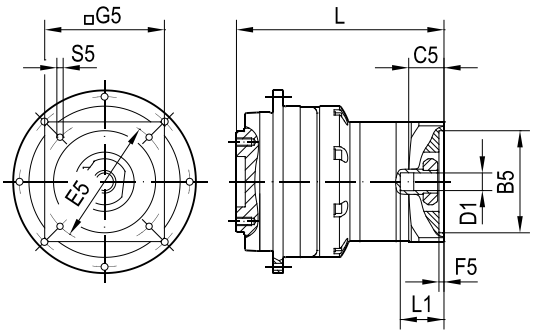

(→ ■ -)	D1	L1	B5	E5	G5	L	C5	F5	S5	Fig.
H.01.03	11	37.6	40	63	55	142	19.7	3.5	M4x12	A
H.02.04	11	37.6	60	75	62	142	19.7	3.5	M5x12	A
H.02.05	11	37.6	60	75	73	142	19.7	3.5	M5x12	A
H.03.03	11	37.6	60	90	73	142	19.7	3.5	M5x12	A
H.04.02	14	37.4	50	95	95	145	25.2	3.5	M6x15	B
H.05.02	14	37.4	60	75	73	145	25.2	3.5	M6x15	B
H.06.02	14	37.4	80	100	95	145	25.2	4	M6x15	B
H.06.05	14	37.4	80	100	88	145	25.2	4	M6x15	B
H.07.01	14	37.4	60	75	73	145	25.2	3.5	M5x12	B
H.32.01	14	37.4	60	82	73	145	25.2	3.5	M5x12	B

27781410/EN – 03/2022

			P5BG41			
Gear ratio			**4**	**5**	**7**	**10**
Short-time duty						
Peak torque	M_{a_pk}	Nm	350	380	350	270
Peak motor speed	n_{e_pk}	min^{-1}	3400	4250	5500	5500
Peak radial force	$F_{R_a_pk}$	N	4650	4650	4650	4650
Peak axial force	$F_{A_a_pk}$	N	4800	4800	4800	4800
Peak breakdown torque	$M_{K_a_pk}$	Nm	440	440	440	440
Continuous duty						
Nominal torque	M_{a_N}	Nm	175	169	172	180
Nominal motor speed	n_{e_N}	min^{-1}	2300	2500	2500	2500
Nominal radial force	$F_{R_a_N}$	N	3440	3580	3950	3950
Nominal axial force	$F_{A_a_N}$	N	4080	4080	4080	4080
Nominal breakdown torque	$M_{K_a_N}$	Nm	325	335	370	370
General technical data						
Torsional rigidity	c_{tr}	Nm/ arcmin	97	84	65	49
Rotational clearance	φ	arcmin	≤ 1 (R) – 3 (N)			
Pull-out rigidity	c_{pr}	Nm/ arcmin	551			
Service life	L	h	> 20000			
Cyclic duration factor	ED	%	≤ 60			
Gear unit temperature	T_{max}	°C	90			
Ambient temperature	T_{amb}	°C	-15 – +40			
Nominal ambient temperature	T_{amb_N}	°C	20			
Efficiency	η	%	97	97	97	97
Sound pressure level	L_P	dB (A)	≤ 61	≤ 61	≤ 61	≤ 61
Degree of protection	–	–	IP65			
No-load speed	M_{e_0}	Nm	2.80	2.30	1.70	1.20
Emergency stop torque	M_{a_es}	Nm	625	625	625	570
Mass moment of inertia incl. adapter						
Coupling Ø 19 mm	J	10^{-4} kgm^2	1.86	1.37	0.91	0.66
Coupling Ø 24 mm	J	10^{-4} kgm^2	3.13	2.64	2.17	1.93
Coupling Ø 28 mm	J	10^{-4} kgm^2	3.68	3.19	2.73	2.49
Coupling Ø 32 mm	J	10^{-4} kgm^2	5.95	5.46	5.02	4.78
Coupling Ø 38 mm	J	10^{-4} kgm^2	8.88	8.39	7.94	7.70
Mass incl. adapter						
Coupling Ø min – max	m	kg	5.50 – 12.82			

27781410/EN – 03/2022

P5BG41..

57 021 00 19

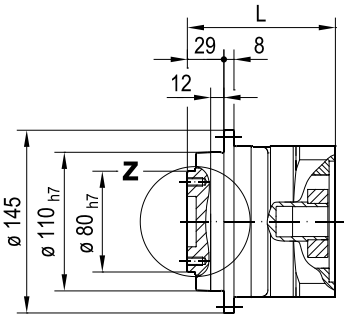

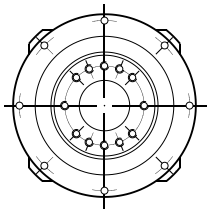

PxBG

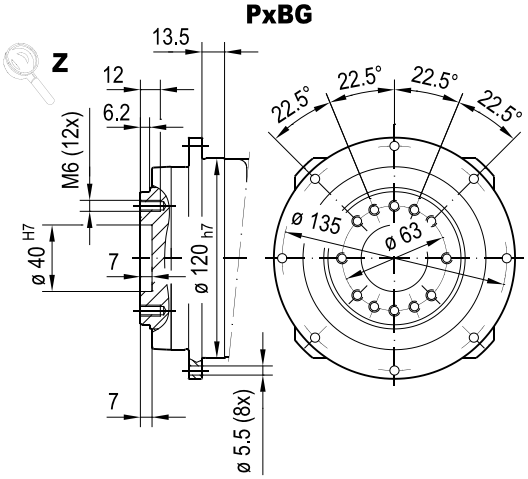

PxCG

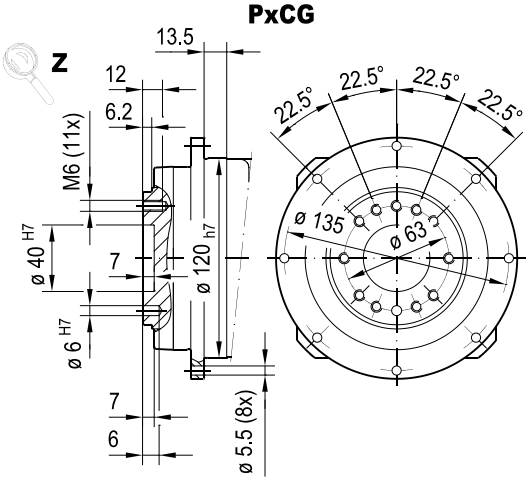

min. □ 120 Fig. B

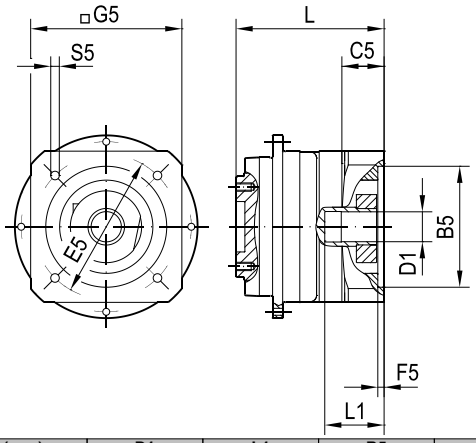

min. □ 152 Fig. C

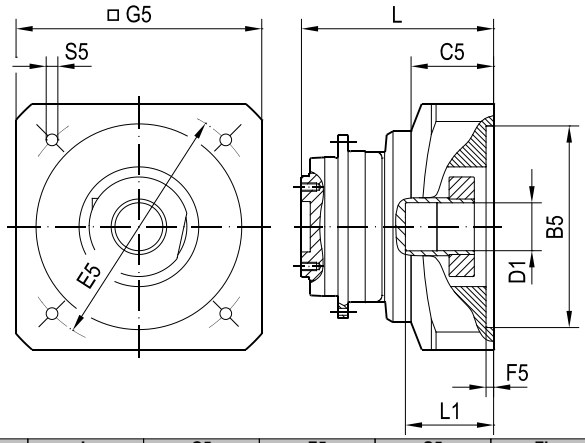

(→ ■ -)	D1	L1	B5	E5	G5	L	C5	F5	S5	Fig.
H.08.02	19	41	80	100	120	102	27	4	M6x15	B
H.09.02	19	42	95	115	120	103	28	4	M8x18	B
H.10.02	19	42	95	130	120	103	28	4	M8x18	B
H.11.02	19	42	110	130	120	103	28	4	M8x18	B
H.12.01	24	50	95	115	120	118	33.5	5	M8x18	B
H.13.01	24	50	95	130	120	118	33.5	5	M8x18	B
H.14.01	24	50	110	130	120	118	33.5	5	M8x18	B
H.15.01	24	51	110	165	143	119	35	5	M10x24	B
H.16.01	24	51	130	165	143	119	35	5	M10x24	B
H.16.03	24	51	130	165	140	119	35	5	M10x24	B
H.17.01	24	52	180	215	192	120	36	5	M10x24	B
H.18.01	28	60	130	165	143	126	45.5	5	M10x24	B
H.18.02	28	60	130	165	138	126	45.5	5	M10x24	B
H.19.01	28	60	180	215	192	126	45.5	5	M12x28	B
H.19.02	28	60	180	215	215	126	45.5	5	M12x28	B
H.20.01	32	65	130	165	152	130	43	5	M10x24	C
H.21.01	32	65	130	215	192	130	43	5	M12x28	C
H.22.01	32	62	155	190	163	127	40	5	M10x24	C
H.23.01	32	65	180	215	190	130	43	5	M12x28	C
H.23.02	32	65	180	215	215	130	43	5	M12x28	C
H.24.01	38	80	114.3	200	180	146	58.5	5	M12x28	C
H.25.01	38	80	180	215	192	146	58.5	5	M12x28	C
H.25.02	38	80	180	215	215	146	58.5	5	M12x28	C
H.25.04	38	80	180	215	190	146	58.5	5	M12x28	C
H.26.01	38	80	230	265	240	146	58.5	5	M12x28	C

27781410/EN – 03/2022

			P5BG42								
Gear ratio			**16**	**20**	**25**	**28**	**35**	**40**	**50**	**70**	**100**
Short-time duty											
Peak torque	M_{a_pk}	Nm	350	350	380	350	380	350	380	350	260
Peak motor speed	n_{e_pk}	min^{-1}	7500	7500	7500	7500	7500	7500	7500	7500	7500
Peak radial force	$F_{R_a_pk}$	N	4650	4650	4650	4650	4650	4650	4650	4650	4650
Peak axial force	$F_{A_a_pk}$	N	4800	4800	4800	4800	4800	4800	4800	4800	4800
Peak breakdown torque	$M_{K_a_pk}$	Nm	440	440	440	440	440	440	440	440	440
Continuous duty											
Nominal torque	M_{a_N}	Nm	250	265	265	280	290	280	300	280	220
Nominal motor speed	n_{e_N}	min^{-1}	2800	2800	2800	2800	2800	2800	3100	3500	4200
Nominal radial force	$F_{R_a_N}$	N	3950	3950	3950	3950	3950	3950	3950	3950	3950
Nominal axial force	$F_{A_a_N}$	N	4080	4080	4080	4080	4080	4080	4080	4080	4080
Nominal breakdown torque	$M_{K_a_N}$	Nm	370	370	370	370	370	370	370	370	370
General technical data											
Torsional rigidity	c_{tr}	Nm/ arcmin	97	95	86	91	84	85	81	67	52
Rotational clearance	φ	arcmin	≤ 1 (R) – 3 (N)								
Pull-out rigidity	c_{pr}	Nm/ arcmin	551								
Service life	L	h	> 20000								
Cyclic duration factor	ED	%	≤ 60								
Gear unit temperature	T_{max}	°C	90								
Ambient temperature	T_{amb}	°C	-15 – +40								
Nominal ambient temperature	T_{amb_N}	°C	20								
Efficiency	η	%	94	94	94	94	94	94	94	94	94
Sound pressure level	L_P	dB (A)	≤ 58	≤ 58	≤ 58	≤ 58	≤ 58	≤ 58	≤ 58	≤ 58	≤ 58
Degree of protection	–	–	IP65								
No-load speed	M_{e_0}	Nm	1.20	1.00	0.90	0.80	0.60	0.59	0.50	0.42	0.38
Emergency stop torque	M_{a_es}	Nm	625	625	625	625	625	625	625	625	575
Mass moment of inertia incl. adapter											
Coupling Ø 14 mm	J	10^{-4} kgm^2	0.57	0.44	0.42	0.33	0.32	0.26	0.26	0.25	0.25
Coupling Ø 19 mm	J	10^{-4} kgm^2	0.80	0.67	0.65	0.55	0.54	0.49	0.49	0.48	0.48
Coupling Ø 24 mm	J	10^{-4} kgm^2	2.07	1.94	1.92	1.82	1.81	1.76	1.76	1.75	1.75
Coupling Ø 28 mm	J	10^{-4} kgm^2	2.62	2.49	2.47	2.38	2.37	2.32	2.31	2.31	2.30
Mass incl. adapter											
Coupling Ø min – max	m	kg	6.16 – 10.96								

27781410/EN – 03/2022

P5BG42..

57 022 00 19

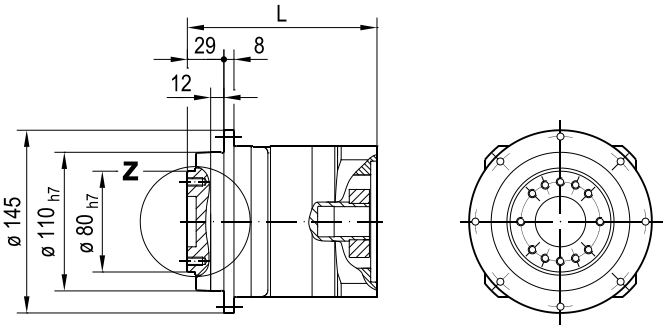

PxBG

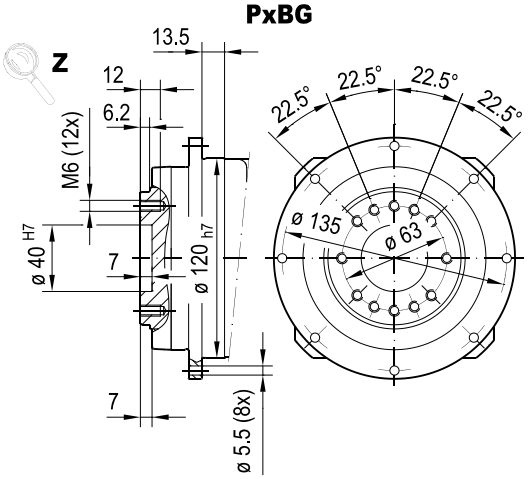

PxCG

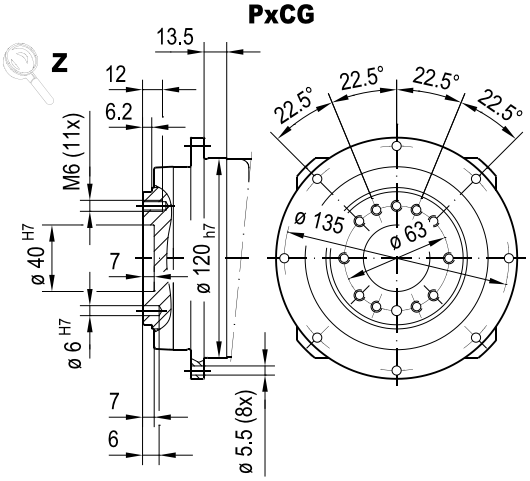

min. □ 95 Fig. A

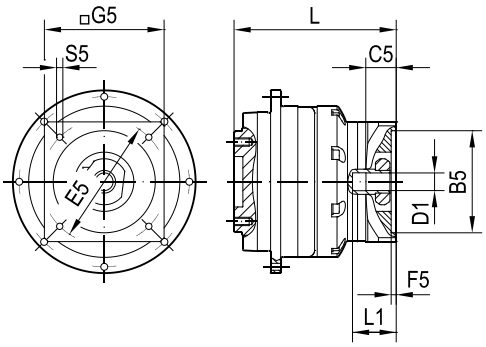

min. □ 120 Fig. B

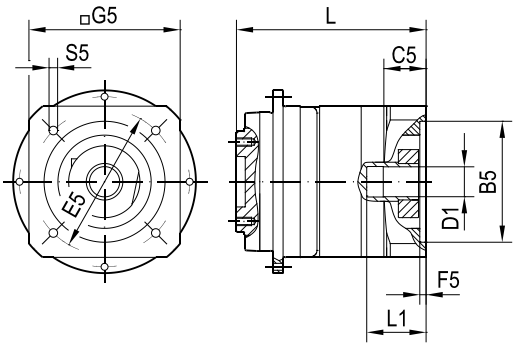

(→)	D1	L1	B5	E5	G5	L	C5	F5	S5	Fig.
H.04.03	14	37.4	50	95	95	129	24.2	3.5	M6x15	A
H.05.03	14	37.4	60	75	95	129	24.2	3.5	M6x15	A
H.06.03	14	37.4	80	100	95	129	24.2	4	M6x15	A
H.07.02	14	37.4	60	75	95	129	24.2	3.5	M5x12	A
H.08.01	19	42	80	100	95	136	28	4	M6x15	A
H.08.02	19	41	80	100	120	135	27	4	M6x15	B
H.09.01	19	42	95	115	105	136	28	4	M8x18	A
H.09.02	19	42	95	115	120	136	28	4	M8x18	B
H.10.02	19	42	95	130	120	136	28	4	M8x18	B
H.11.02	19	42	110	130	120	136	28	4	M8x18	B
H.12.01	24	50	95	115	120	151	33.5	5	M8x18	B
H.13.01	24	50	95	130	120	151	33.5	5	M8x18	B
H.14.01	24	50	110	130	120	151	33.5	5	M8x18	B
H.15.01	24	51	110	165	143	152	35	5	M10x24	B
H.16.01	24	51	130	165	143	152	35	5	M10x24	B
H.16.03	24	51	130	165	140	152	35	5	M10x24	B
H.17.01	24	52	180	215	192	153	36	5	M10x24	B
H.18.01	28	60	130	165	143	159	45.5	5	M10x24	B
H.18.02	28	60	130	165	138	159	45.5	5	M10x24	B
H.19.01	28	60	180	215	192	159	45.5	5	M12x28	B
H.19.02	28	60	180	215	215	159	45.5	5	M12x28	B
H.32.02	14	37.4	60	82	95	129	24.2	3.5	M5x12	A

27781410/EN – 03/2022

			P5BG43							
Gear ratio			**64**	**80**	**112**	**125**	**140**	**160**	**175**	**196**
Short-time duty										
Peak torque	M_{a_pk}	Nm	350	350	350	380	350	350	380	350
Peak motor speed	n_{e_pk}	min^{-1}	7500	7500	7500	7500	7500	7500	7500	7500
Peak radial force	$F_{R_a_pk}$	N	4650	4650	4650	4650	4650	4650	4650	4650
Peak axial force	$F_{A_a_pk}$	N	4800	4800	4800	4800	4800	4800	4800	4800
Peak breakdown torque	$M_{K_a_pk}$	Nm	440	440	440	440	440	440	440	440
Continuous duty										
Nominal torque	M_{a_N}	Nm	240	240	240	255	255	240	255	275
Nominal motor speed	n_{e_N}	min^{-1}	4000	4000	4000	4000	4000	4000	4000	4000
Nominal radial force	$F_{R_a_N}$	N	3950	3950	3950	3950	3950	3950	3950	3950
Nominal axial force	$F_{A_a_N}$	N	4080	4080	4080	4080	4080	4080	4080	4080
Nominal breakdown torque	$M_{K_a_N}$	Nm	370	370	370	370	370	370	370	370
General technical data										
Torsional rigidity	c_{tr}	Nm/ arcmin	95	95	94	85	93	92	84	90
Rotational clearance	φ	arcmin	≤ 2 (R) – 3 (N)							
Pull-out rigidity	c_{pr}	Nm/ arcmin	551							
Service life	L	h	> 20000							
Cyclic duration factor	ED	%	≤ 60							
Gear unit temperature	T_{max}	°C	90							
Ambient temperature	T_{amb}	°C	-15 – +40							
Nominal ambient temperature	T_{amb_N}	°C	20							
Efficiency	η	%	92	92	92	92	92	92	92	92
Sound pressure level	L_P	dB (A)	≤ 56	≤ 56	≤ 56	≤ 56	≤ 56	≤ 56	≤ 56	≤ 56
Degree of protection	–	–	IP65							
No-load speed	M_{e_0}	Nm	0.54	0.47	0.37	0.35	0.32	0.29	0.28	0.26
Emergency stop torque	M_{a_es}	Nm	625	625	625	625	625	625	625	625
Mass moment of inertia incl. adapter										
Coupling Ø 11 mm	J	10^{-4} kgm^2	0.15	0.12	0.09	0.11	0.09	0.08	0.09	0.09
Coupling Ø 14 mm	J	10^{-4} kgm^2	0.30	0.26	0.23	0.26	0.23	0.22	0.23	0.23
Coupling Ø 19 mm	J	10^{-4} kgm^2	0.52	0.49	0.46	0.48	0.46	0.45	0.46	0.46
Mass incl. adapter										
Coupling Ø min – max	m	kg	6.49 – 7.51							

27781410/EN – 03/2022

P5BG43..

57 078 00 19

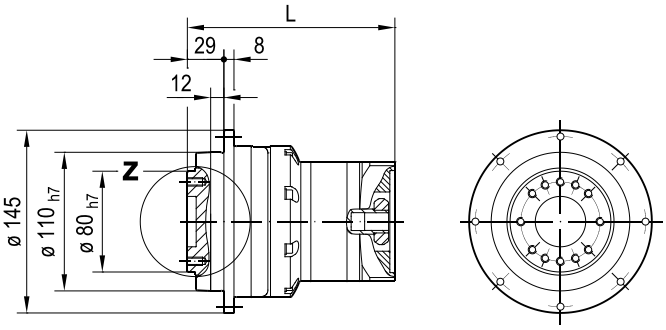

PxBG

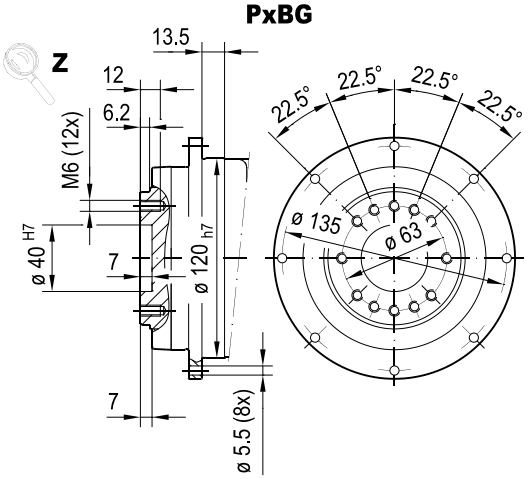

PxCG

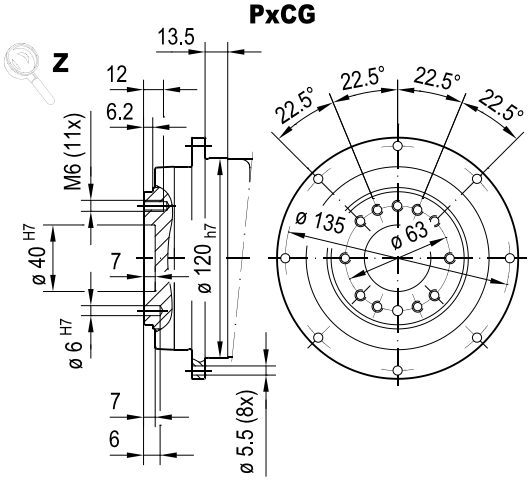

min. □ 73 Fig. A

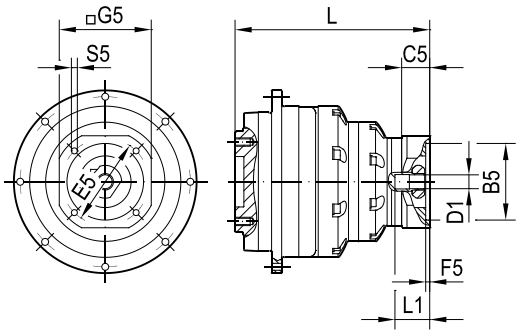

min. □ 95 Fig. B

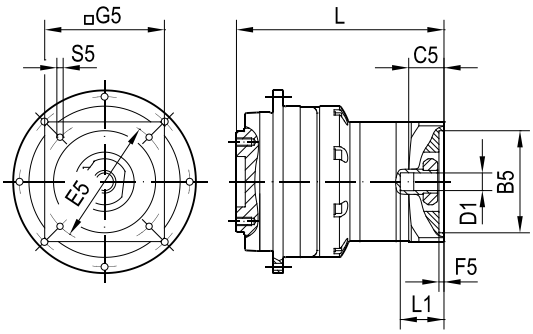

(→ ■ -)	D1	L1	B5	E5	G5	L	C5	F5	S5	Fig.
H.01.02	11	37.6	40	63	73	155	22.3	0	M4x12	A
H.02.03	11	37.6	60	75	73	155	22.3	3.5	M5x12	A
H.03.02	11	37.6	60	90	73	155	22.3	3.5	M5x12	A
H.04.02	14	37.4	50	95	95	158	25.2	3.5	M6x15	A
H.04.03	14	37.4	50	95	95	158	24.2	3.5	M6x15	B
H.05.02	14	37.4	60	75	73	158	25.2	3.5	M6x15	A
H.05.03	14	37.4	60	75	95	158	24.2	3.5	M6x15	B
H.06.03	14	37.4	80	100	95	158	24.2	4	M6x15	B
H.06.05	14	37.4	80	100	88	158	25.2	4	M6x15	A
H.07.01	14	37.4	60	75	73	158	25.2	3.5	M5x12	A
H.07.02	14	37.4	60	75	95	158	24.2	3.5	M5x12	B
H.08.01	19	42	80	100	95	165	28	4	M6x15	B
H.09.01	19	42	95	115	105	165	28	4	M8x18	B
H.10.01	19	42	95	130	120	165	28	4	M8x18	B
H.11.01	19	42	110	130	120	165	28	4	M8x18	B
H.32.01	14	37.4	60	82	73	158	25.2	3.5	M5x12	A
H.32.02	14	37.4	60	82	95	158	24.2	3.5	M5x12	B

27781410/EN – 03/2022

			P5BG43							
Gear ratio			**200**	**245**	**250**	**280**	**350**	**400**	**500**	**700**
Short-time duty										
Peak torque	M_{a_pk}	Nm	350	380	380	350	380	350	380	350
Peak motor speed	n_{e_pk}	min^{-1}	7500	7500	7500	7500	7500	7500	7500	7500
Peak radial force	$F_{R_a_pk}$	N	4650	4650	4650	4650	4650	4650	4650	4650
Peak axial force	$F_{A_a_pk}$	N	4800	4800	4800	4800	4800	4800	4800	4800
Peak breakdown torque	$M_{K_a_pk}$	Nm	440	440	440	440	440	440	440	440
Continuous duty										
Nominal torque	M_{a_N}	Nm	255	275	255	275	275	275	275	275
Nominal motor speed	n_{e_N}	min^{-1}	4000	4000	4000	4000	4000	4000	4000	4000
Nominal radial force	$F_{R_a_N}$	N	3950	3950	3950	3950	3950	3950	3950	3950
Nominal axial force	$F_{A_a_N}$	N	4080	4080	4080	4080	4080	4080	4080	4080
Nominal breakdown torque	$M_{K_a_N}$	Nm	370	370	370	370	370	370	370	370
General technical data										
Torsional rigidity	c_{tr}	Nm/ arcmin	92	83	84	90	83	85	80	67
Rotational clearance	φ	arcmin	≤ 2 (R) – 3 (N)							
Pull-out rigidity	c_{pr}	Nm/ arcmin	551							
Service life	L	h	> 20000							
Cyclic duration factor	ED	%	≤ 60							
Gear unit temperature	T_{max}	°C	90							
Ambient temperature	T_{amb}	°C	-15 – +40							
Nominal ambient temperature	T_{amb_N}	°C	20							
Efficiency	η	%	92	92	92	92	92	92	92	92
Sound pressure level	L_P	dB (A)	≤ 56	≤ 56	≤ 56	≤ 56	≤ 56	≤ 56	≤ 56	≤ 56
Degree of protection	–	–	IP65							
No-load speed	M_{e_0}	Nm	0.25	0.22	0.22	0.20	0.17	0.16	0.14	0.11
Emergency stop torque	M_{a_es}	Nm	625	625	625	625	625	625	625	625
Mass moment of inertia incl. adapter										
Coupling Ø 11 mm	J	10^{-4} kgm^2	0.07	0.09	0.07	0.07	0.07	0.07	0.07	0.07
Coupling Ø 14 mm	J	10^{-4} kgm^2	0.22	0.23	0.22	0.22	0.22	0.21	0.21	0.21
Coupling Ø 19 mm	J	10^{-4} kgm^2	0.44	0.46	0.44	0.44	0.44	0.44	0.44	0.44
Mass incl. adapter										
Coupling Ø min – max	m	kg	6.49 – 7.51							

27781410/EN – 03/2022

P5BG43..

57 078 00 19

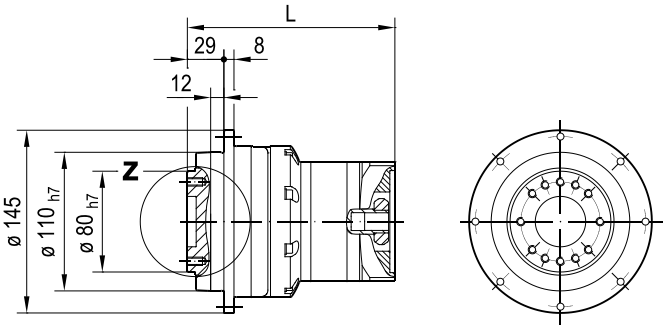

PxBG

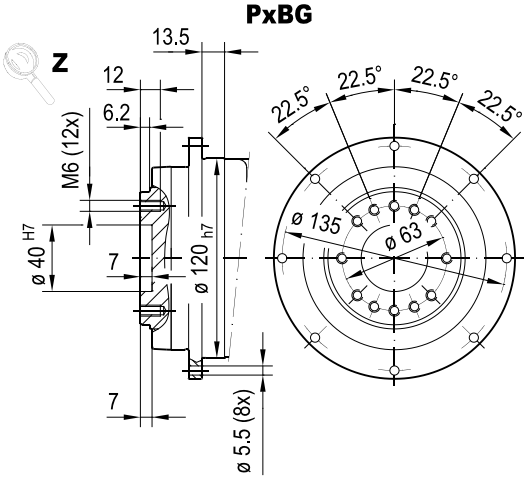

PxCG

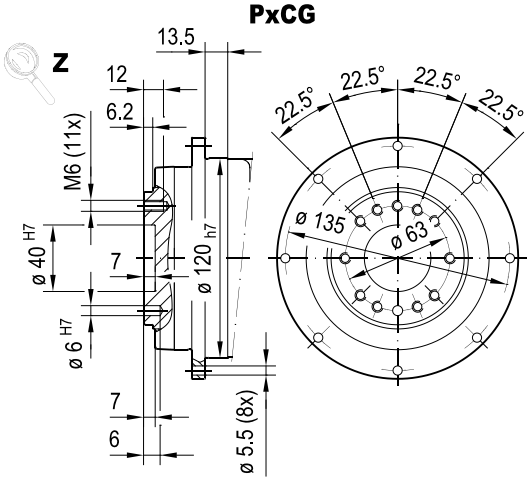

min. □ 73 Fig. A

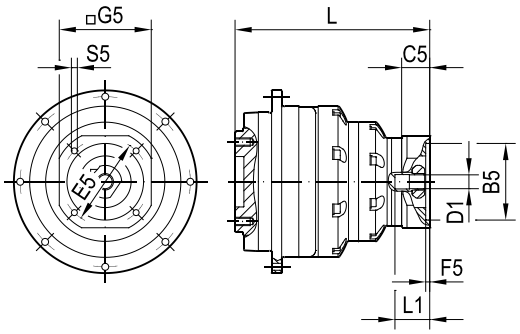

min. □ 95 Fig. B

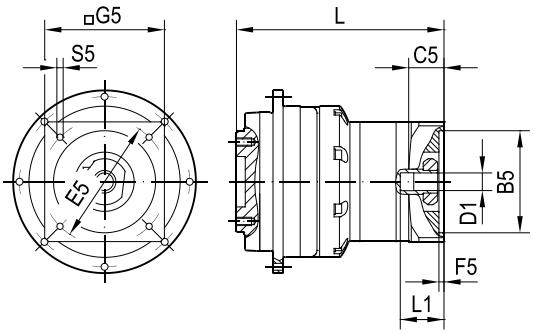

(→ ■ -)	D1	L1	B5	E5	G5	L	C5	F5	S5	Fig.
H.01.02	11	37.6	40	63	73	155	22.3	0	M4x12	A
H.02.03	11	37.6	60	75	73	155	22.3	3.5	M5x12	A
H.03.02	11	37.6	60	90	73	155	22.3	3.5	M5x12	A
H.04.02	14	37.4	50	95	95	158	25.2	3.5	M6x15	A
H.04.03	14	37.4	50	95	95	158	24.2	3.5	M6x15	B
H.05.02	14	37.4	60	75	73	158	25.2	3.5	M6x15	A
H.05.03	14	37.4	60	75	95	158	24.2	3.5	M6x15	B
H.06.03	14	37.4	80	100	95	158	24.2	4	M6x15	B
H.06.05	14	37.4	80	100	88	158	25.2	4	M6x15	A
H.07.01	14	37.4	60	75	73	158	25.2	3.5	M5x12	A
H.07.02	14	37.4	60	75	95	158	24.2	3.5	M5x12	B
H.08.01	19	42	80	100	95	165	28	4	M6x15	B
H.09.01	19	42	95	115	105	165	28	4	M8x18	B
H.10.01	19	42	95	130	120	165	28	4	M8x18	B
H.11.01	19	42	110	130	120	165	28	4	M8x18	B
H.32.01	14	37.4	60	82	73	158	25.2	3.5	M5x12	A
H.32.02	14	37.4	60	82	95	158	24.2	3.5	M5x12	B

27781410/EN – 03/2022

			P5BG51			
Gear ratio			**4**	**5**	**7**	**10**
Short-time duty						
Peak torque	M_{a_pk}	Nm	840	840	720	555
Peak motor speed	n_{e_pk}	min^{-1}	2600	3250	4550	5000
Peak radial force	$F_{R_a_pk}$	N	16400	16400	16400	16400
Peak axial force	$F_{A_a_pk}$	N	6130	6130	6130	6130
Peak breakdown torque	$M_{K_a_pk}$	Nm	1330	1330	1330	1330
Continuous duty						
Nominal torque	M_{a_N}	Nm	345	335	320	330
Nominal motor speed	n_{e_N}	min^{-1}	1900	2000	2500	2500
Nominal radial force	$F_{R_a_N}$	N	6090	6420	6640	7390
Nominal axial force	$F_{A_a_N}$	N	5210	5210	5210	5210
Nominal breakdown torque	$M_{K_a_N}$	Nm	755	795	820	910
General technical data						
Torsional rigidity	c_{tr}	Nm/ arcmin	204	188	143	103
Rotational clearance	φ	arcmin	≤ 1 (R) – 3 (N)			
Pull-out rigidity	c_{pr}	Nm/ arcmin	1233			
Service life	L	h	> 20000			
Cyclic duration factor	ED	%	≤ 60			
Gear unit temperature	T_{max}	°C	90			
Ambient temperature	T_{amb}	°C	-15 – +40			
Nominal ambient temperature	T_{amb_N}	°C	20			
Efficiency	η	%	97	97	97	97
Sound pressure level	L_P	dB (A)	≤ 64	≤ 64	≤ 64	≤ 64
Degree of protection	–	–	IP65			
No-load speed	M_{e_0}	Nm	6.50	5.30	3.80	2.60
Emergency stop torque	M_{a_es}	Nm	1250	1250	1250	1140
Mass moment of inertia incl. adapter						
Coupling Ø 24 mm	J	10^{-4} kgm^2	7.19	5.34	3.48	2.57
Coupling Ø 32 mm	J	10^{-4} kgm^2	11.36	8.02	6.31	5.41
Coupling Ø 38 mm	J	10^{-4} kgm^2	12.79	10.94	9.23	8.34
Coupling Ø 48 mm	J	10^{-4} kgm^2	26.72	24.87	23.20	22.32
Mass incl. adapter						
Coupling Ø min – max	m	kg	11.75 – 23.13			

27781410/EN – 03/2022

P5BG51..

57 023 00 19

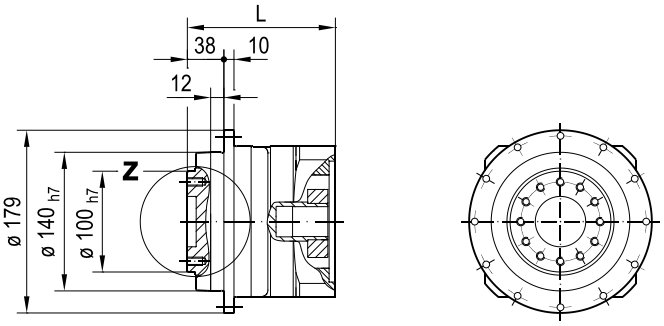

PxBG

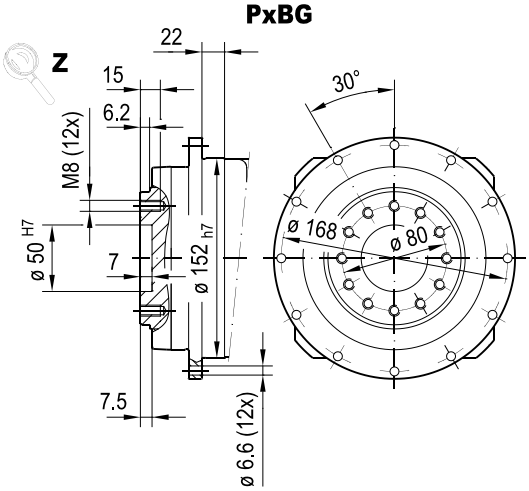

PxCG

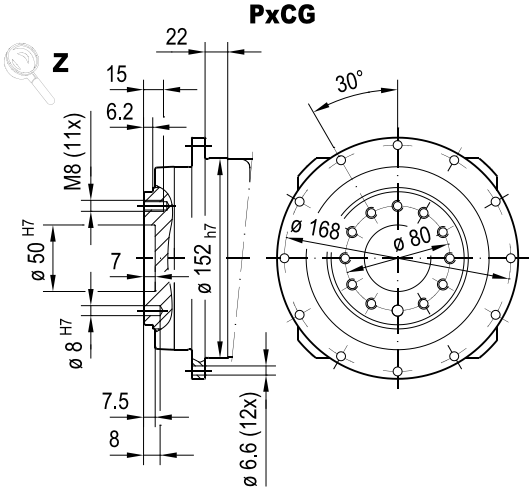

min. □ 152 Fig. B

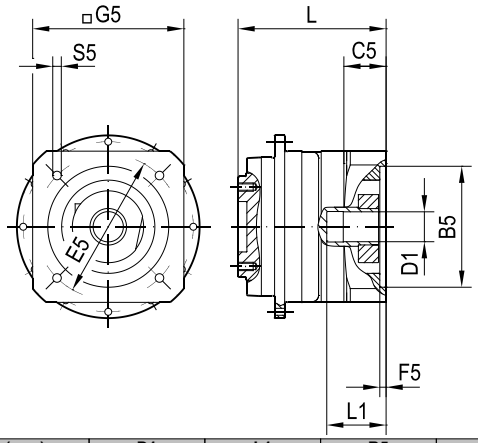

min. □ 215 Fig. C

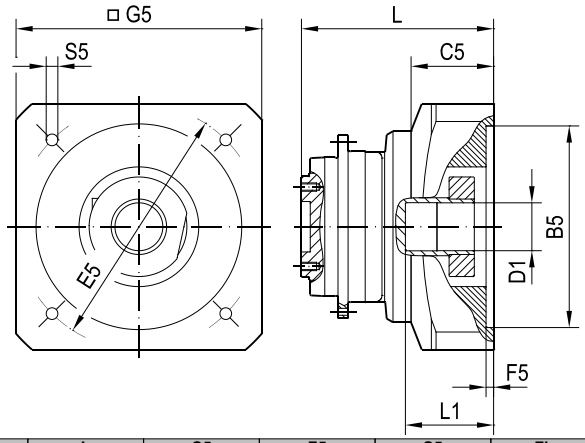

(→)	D1	L1	B5	E5	G5	L	C5	F5	S5	Fig.
H.12.02	24	50	95	115	152	132	34.5	5	M8x18	B
H.13.02	24	50	95	130	152	132	34.5	5	M8x18	B
H.14.02	24	50	110	130	152	132	34.5	5	M8x18	B
H.15.02	24	50	110	165	152	133	35	5	M10x24	B
H.16.02	24	50	130	165	152	133	35	5	M10x24	B
H.17.02	24	50	180	215	192	133	35	5	M10x24	B
H.20.01	32	65	130	165	152	145	43	5	M10x24	B
H.21.01	32	65	130	215	192	145	43	5	M12x28	B
H.22.01	32	62	155	190	163	142	40	5	M10x24	B
H.23.01	32	65	180	215	190	145	43	5	M12x28	B
H.23.02	32	65	180	215	215	145	43	5	M12x28	B
H.24.01	38	80	114.3	200	180	160	58.5	5	M12x28	B
H.25.01	38	80	180	215	192	160	58.5	5	M12x28	B
H.25.02	38	80	180	215	215	160	58.5	5	M12x28	B
H.25.04	38	80	180	215	190	160	58.5	5	M12x28	B
H.26.01	38	80	230	265	240	160	58.5	5	M12x28	B
H.27.01	48	85	180	215	215	172	54.5	7	M12x28	C
H.28.01	48	110	230	265	240	197	79.5	7	M12x28	C
H.30.01	48	82	250	300	262	169	51.5	7	M16x36	C

27781410/EN – 03/2022

			P5BG52								
Gear ratio			**16**	**20**	**25**	**28**	**35**	**40**	**50**	**70**	**100**
Short-time duty											
Peak torque	M_{a_pk}	Nm	820	820	820	820	820	820	820	725	530
Peak motor speed	n_{e_pk}	min^{-1}	6250	6250	6250	6250	6250	6250	6250	6250	6250
Peak radial force	$F_{R_a_pk}$	N	16400	16400	16400	16400	16400	16400	16400	16400	16400
Peak axial force	$F_{A_a_pk}$	N	6130	6130	6130	6130	6130	6130	6130	6130	6130
Peak breakdown torque	$M_{K_a_pk}$	Nm	1330	1330	1330	1330	1330	1330	1330	1330	1330
Continuous duty											
Nominal torque	M_{a_N}	Nm	460	490	485	545	540	605	585	595	450
Nominal motor speed	n_{e_N}	min^{-1}	2900	2900	2900	2900	2900	2900	3200	3200	3900
Nominal radial force	$F_{R_a_N}$	N	8140	8700	9300	9630	10200	10700	11100	12300	12900
Nominal axial force	$F_{A_a_N}$	N	5210	5210	5210	5210	5210	5210	5210	5210	5210
Nominal breakdown torque	$M_{K_a_N}$	Nm	1000	1070	1130	1130	1130	1130	1130	1130	1130
General technical data											
Torsional rigidity	c_{tr}	Nm/ arcmin	217	213	198	205	194	191	184	158	118
Rotational clearance	φ	arcmin	≤ 1 (R) – 3 (N)								
Pull-out rigidity	c_{pr}	Nm/ arcmin	1233								
Service life	L	h	> 20000								
Cyclic duration factor	ED	%	≤ 60								
Gear unit temperature	T_{max}	°C	90								
Ambient temperature	T_{amb}	°C	-15 – +40								
Nominal ambient temperature	T_{amb_N}	°C	20								
Efficiency	η	%	94	94	94	94	94	94	94	94	94
Sound pressure level	L_P	dB (A)	≤ 58	≤ 58	≤ 58	≤ 58	≤ 58	≤ 58	≤ 58	≤ 58	≤ 58
Degree of protection	–	–	IP65								
No-load speed	M_{e_0}	Nm	2.80	2.40	2.60	2.00	1.50	1.50	1.20	1.10	0.88
Emergency stop torque	M_{a_es}	Nm	1250	1250	1250	1250	1250	1250	1250	1250	1140
Mass moment of inertia incl. adapter											
Coupling Ø 19 mm	J	10^{-4} kgm^2	1.94	1.36	1.28	0.90	0.86	0.66	0.64	0.63	0.62
Coupling Ø 24 mm	J	10^{-4} kgm^2	3.11	2.63	2.55	2.17	2.13	1.93	1.91	1.90	1.89
Coupling Ø 28 mm	J	10^{-4} kgm^2	3.66	3.18	3.10	2.72	2.68	2.49	2.47	2.45	2.44
Coupling Ø 32 mm	J	10^{-4} kgm^2	5.93	5.45	5.38	5.01	4.97	4.77	4.75	4.74	4.73
Coupling Ø 38 mm	J	10^{-4} kgm^2	8.86	8.38	8.30	7.93	7.90	7.70	7.68	7.66	7.65
Mass incl. adapter											
Coupling Ø min – max	m	kg	12.20 – 19.85								

27781410/EN – 03/2022

P5BG52..

57 024 00 19

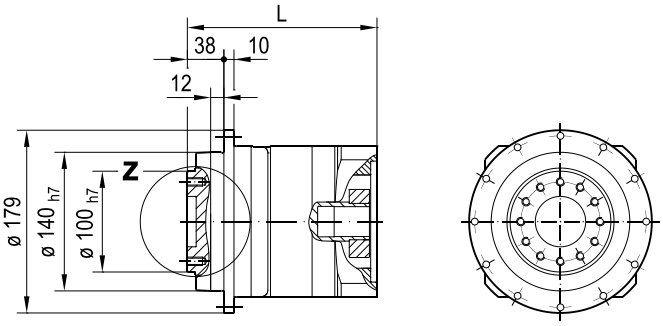

PxBG

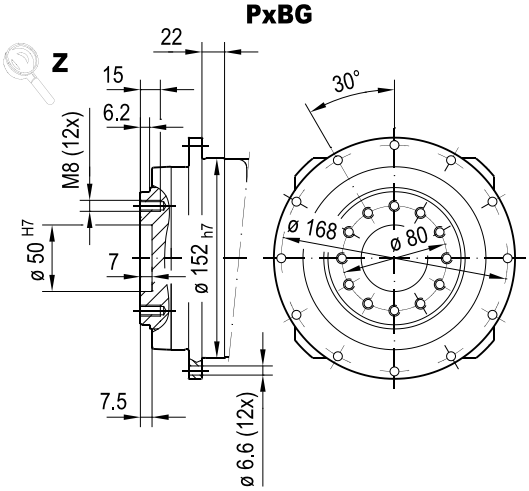

PxCG

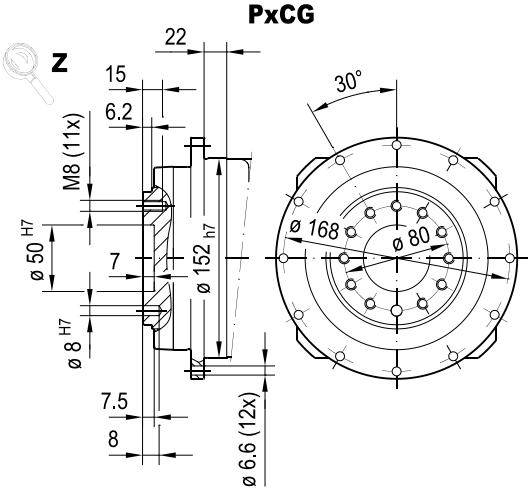

min. □ 120 Fig. A

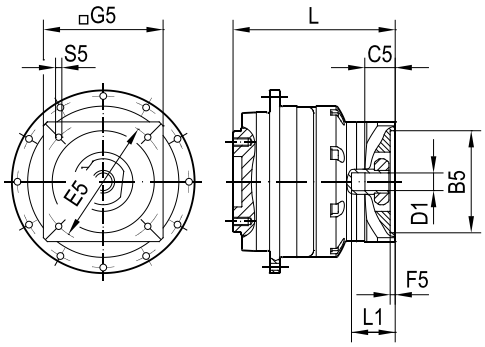

min. □ 152 Fig. B

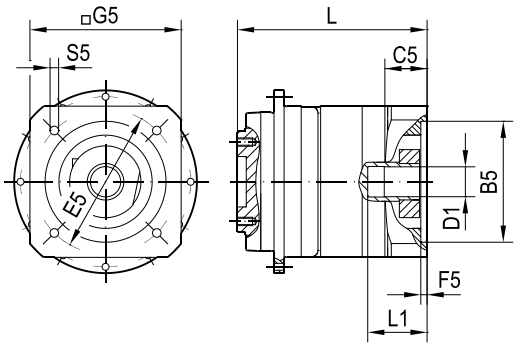

(→ ■ -)	D1	L1	B5	E5	G5	L	C5	F5	S5	Fig.
H.08.02	19	41	80	100	120	157	27	4	M6x15	A
H.09.02	19	42	95	115	120	158	28	4	M8x18	A
H.10.02	19	42	95	130	120	158	28	4	M8x18	A
H.11.02	19	42	110	130	120	158	28	4	M8x18	A
H.12.01	24	50	95	115	120	173	33.5	5	M8x18	A
H.12.02	24	50	95	115	152	173	34.5	5	M8x18	B
H.13.01	24	50	95	130	120	173	33.5	5	M8x18	A
H.13.02	24	50	95	130	152	173	34.5	5	M8x18	B
H.14.01	24	50	110	130	120	173	33.5	5	M8x18	A
H.14.02	24	50	110	130	152	173	34.5	5	M8x18	B
H.15.01	24	51	110	165	143	174	35	5	M10x24	A
H.15.02	24	50	110	165	152	173	35	5	M10x24	B
H.16.01	24	51	130	165	143	174	35	5	M10x24	A
H.16.02	24	50	130	165	152	173	35	5	M10x24	B
H.16.03	24	51	130	165	140	174	35	5	M10x24	A
H.17.02	24	50	180	215	192	173	35	5	M10x24	B
H.18.01	28	60	130	165	143	181	45.5	5	M10x24	A
H.18.02	28	60	130	165	138	181	45.5	5	M10x24	A
H.20.01	32	65	130	165	152	185	43	5	M10x24	B
H.21.01	32	65	130	215	192	185	43	5	M12x28	B
H.22.01	32	62	155	190	163	182	40	5	M10x24	B
H.23.01	32	65	180	215	190	185	43	5	M12x28	B
H.23.02	32	65	180	215	215	185	43	5	M12x28	B
H.24.01	38	80	114.3	200	180	201	58.5	5	M12x28	B
H.25.01	38	80	180	215	192	201	58.5	5	M12x28	B
H.25.02	38	80	180	215	215	201	58.5	5	M12x28	B
H.25.04	38	80	180	215	190	201	58.5	5	M12x28	B
H.26.01	38	80	230	265	240	201	58.5	5	M12x28	B

27781410/EN – 03/2022

			P5BG53							
Gear ratio			**64**	**80**	**112**	**125**	**140**	**160**	**175**	**196**
Short-time duty										
Peak torque	M_{a_pk}	Nm	820	820	820	820	820	820	820	820
Peak motor speed	n_{e_pk}	min^{-1}	6250	6250	6250	6250	6250	6250	6250	6250
Peak radial force	$F_{R_a_pk}$	N	16400	16400	16400	16400	16400	16400	16400	16400
Peak axial force	$F_{A_a_pk}$	N	6130	6130	6130	6130	6130	6130	6130	6130
Peak breakdown torque	$M_{K_a_pk}$	Nm	1330	1330	1330	1330	1330	1330	1330	1330
Continuous duty										
Nominal torque	M_{a_N}	Nm	460	460	460	485	490	460	485	545
Nominal motor speed	n_{e_N}	min^{-1}	3500	3500	3500	3500	3500	3500	3500	3500
Nominal radial force	$F_{R_a_N}$	N	11600	12400	13700	13900	13900	13900	13900	13900
Nominal axial force	$F_{A_a_N}$	N	5210	5210	5210	5210	5210	5210	5210	5210
Nominal breakdown torque	$M_{K_a_N}$	Nm	1130	1130	1130	1130	1130	1130	1130	1130
General technical data										
Torsional rigidity	c_{tr}	Nm/ arcmin	213	213	213	195	208	211	195	202
Rotational clearance	φ	arcmin	≤ 2 (R) – 3 (N)							
Pull-out rigidity	c_{pr}	Nm/ arcmin	1233							
Service life	L	h	> 20000							
Cyclic duration factor	ED	%	≤ 60							
Gear unit temperature	T_{max}	°C	90							
Ambient temperature	T_{amb}	°C	-15 – +40							
Nominal ambient temperature	T_{amb_N}	°C	20							
Efficiency	η	%	92	92	92	92	92	92	92	92
Sound pressure level	L_P	dB (A)	≤ 57	≤ 57	≤ 57	≤ 57	≤ 57	≤ 57	≤ 57	≤ 57
Degree of protection	–	–	IP65							
No-load speed	M_{e_0}	Nm	1.50	1.30	1.10	1.10	1.00	0.93	0.89	0.83
Emergency stop torque	M_{a_es}	Nm	1250	1250	1250	1250	1250	1250	1250	1250
Mass moment of inertia incl. adapter										
Coupling Ø 14 mm	J	10^{-4} kgm^2	0.57	0.44	0.33	0.42	0.32	0.26	0.31	0.31
Coupling Ø 19 mm	J	10^{-4} kgm^2	0.80	0.67	0.55	0.65	0.54	0.49	0.54	0.53
Coupling Ø 24 mm	J	10^{-4} kgm^2	2.07	1.94	1.82	1.91	1.81	1.76	1.81	1.80
Coupling Ø 28 mm	J	10^{-4} kgm^2	2.62	2.49	2.38	2.47	2.37	2.32	2.37	2.36
Mass incl. adapter										
Coupling Ø min – max	m	kg	12.85 – 17.69							

27781410/EN – 03/2022

P5BG53..

57 079 00 19

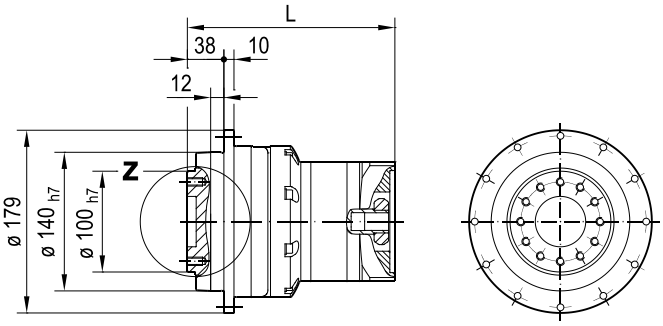

PxBG

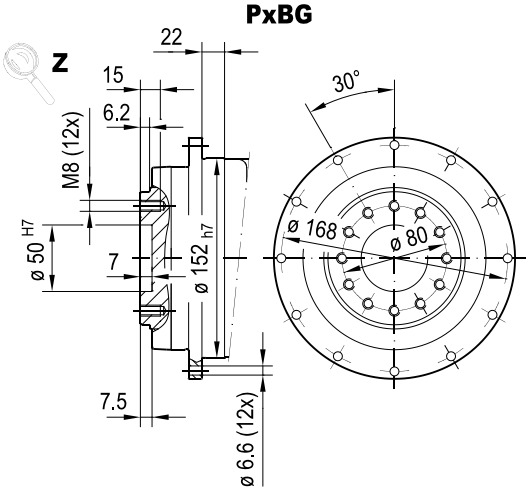

PxCG

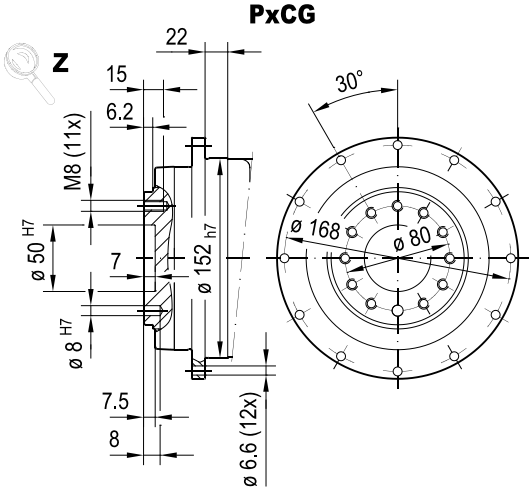

min. □ 95 Fig. A

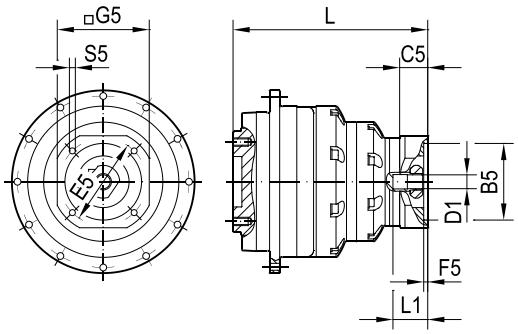

min. □ 120 Fig. B

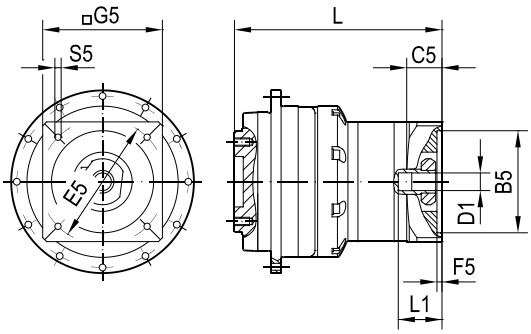

(→ 📖 -)	D1	L1	B5	E5	G5	L	C5	F5	S5	Fig.
H.04.03	14	37.4	50	95	95	184	24.2	3.5	M6x15	A
H.05.03	14	37.4	60	75	95	184	24.2	3.5	M6x15	A
H.06.03	14	37.4	80	100	95	184	24.2	4	M6x15	A
H.07.02	14	37.4	60	75	95	184	24.2	3.5	M5x12	A
H.08.01	19	42	80	100	95	191	28	4	M6x15	A
H.08.02	19	41	80	100	120	190	27	4	M6x15	B
H.09.01	19	42	95	115	105	191	28	4	M8x18	A
H.09.02	19	42	95	115	120	191	28	4	M8x18	B
H.10.02	19	42	95	130	120	191	28	4	M8x18	B
H.11.02	19	42	110	130	120	191	28	4	M8x18	B
H.12.01	24	50	95	115	120	206	33.5	5	M8x18	B
H.13.01	24	50	95	130	120	206	33.5	5	M8x18	B
H.14.01	24	50	110	130	120	206	33.5	5	M8x18	B
H.15.01	24	51	110	165	143	207	35	5	M10x24	B
H.16.01	24	51	130	165	143	207	35	5	M10x24	B
H.16.03	24	51	130	165	140	207	35	5	M10x24	B
H.17.01	24	52	180	215	192	208	36	5	M10x24	B
H.18.01	28	60	130	165	143	214	45.5	5	M10x24	B
H.18.02	28	60	130	165	138	214	45.5	5	M10x24	B
H.19.01	28	60	180	215	192	214	45.5	5	M12x28	B
H.19.02	28	60	180	215	215	214	45.5	5	M12x28	B
H.32.02	14	37.4	60	82	95	184	24.2	3.5	M5x12	A

27781410/EN – 03/2022

			P5BG53							
Gear ratio			**200**	**245**	**250**	**280**	**350**	**400**	**500**	**700**
Short-time duty										
Peak torque	M_{a_pk}	Nm	820	820	820	820	820	820	820	725
Peak motor speed	n_{e_pk}	min^{-1}	6250	6250	6250	6250	6250	6250	6250	6250
Peak radial force	$F_{R_a_pk}$	N	16400	16400	16400	16400	16400	16400	16400	16400
Peak axial force	$F_{A_a_pk}$	N	6130	6130	6130	6130	6130	6130	6130	6130
Peak breakdown torque	$M_{K_a_pk}$	Nm	1330	1330	1330	1330	1330	1330	1330	1330
Continuous duty										
Nominal torque	M_{a_N}	Nm	490	535	485	545	535	580	535	580
Nominal motor speed	n_{e_N}	min^{-1}	3500	3500	3500	3500	3500	3500	3500	3500
Nominal radial force	$F_{R_a_N}$	N	13900	13900	13900	13900	13900	13900	13900	13900
Nominal axial force	$F_{A_a_N}$	N	5210	5210	5210	5210	5210	5210	5210	5210
Nominal breakdown torque	$M_{K_a_N}$	Nm	1130	1130	1130	1130	1130	1130	1130	1130
General technical data										
Torsional rigidity	c_{tr}	Nm/ arcmin	207	190	194	201	191	192	185	159
Rotational clearance	φ	arcmin	≤ 2 (R) – 3 (N)							
Pull-out rigidity	c_{pr}	Nm/ arcmin	1233							
Service life	L	h	> 20000							
Cyclic duration factor	ED	%	≤ 60							
Gear unit temperature	T_{max}	°C	90							
Ambient temperature	T_{amb}	°C	-15 – +40							
Nominal ambient temperature	T_{amb_N}	°C	20							
Efficiency	η	%	92	92	92	92	92	92	92	92
Sound pressure level	L_P	dB (A)	≤ 57	≤ 57	≤ 57	≤ 57	≤ 57	≤ 57	≤ 57	≤ 57
Degree of protection	–	–	IP65							
No-load speed	M_{e_0}	Nm	0.82	0.74	0.73	0.69	0.61	0.57	0.50	0.42
Emergency stop torque	M_{a_es}	Nm	1250	1250	1250	1250	1250	1250	1250	1250
Mass moment of inertia incl. adapter										
Coupling Ø 14 mm	J	10^{-4} kgm^2	0.26	0.31	0.26	0.25	0.25	0.25	0.25	0.25
Coupling Ø 19 mm	J	10^{-4} kgm^2	0.49	0.53	0.49	0.48	0.48	0.48	0.48	0.48
Coupling Ø 24 mm	J	10^{-4} kgm^2	1.76	1.80	1.76	1.75	1.75	1.75	1.75	1.75
Coupling Ø 28 mm	J	10^{-4} kgm^2	2.31	2.36	2.31	2.31	2.31	2.30	2.30	2.30
Mass incl. adapter										
Coupling Ø min – max	m	kg	12.85 – 17.69							

27781410/EN – 03/2022

P5BG53..

57 079 00 19

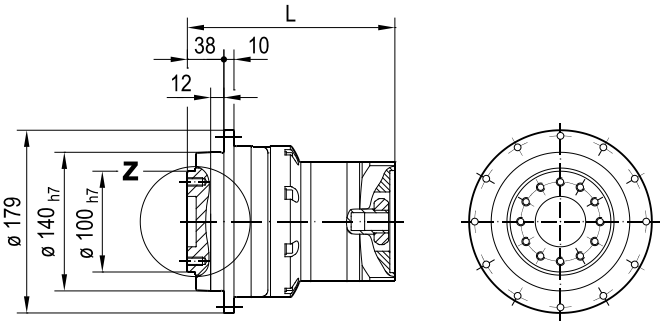

PxBG

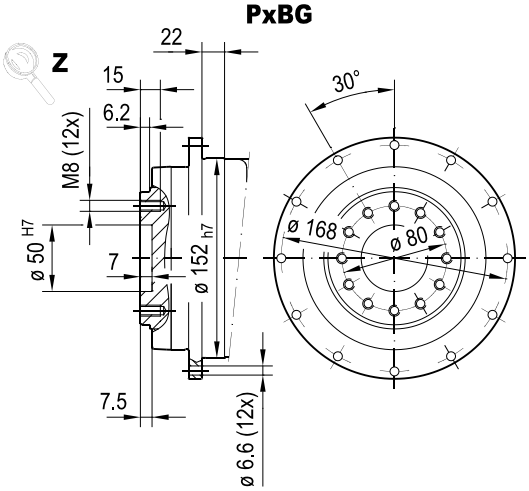

PxCG

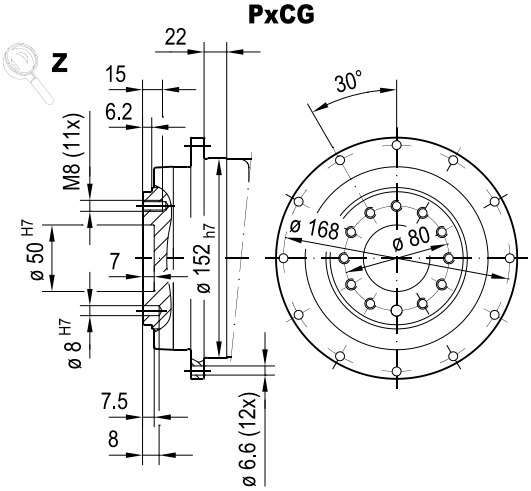

min. □ 95 Fig. A

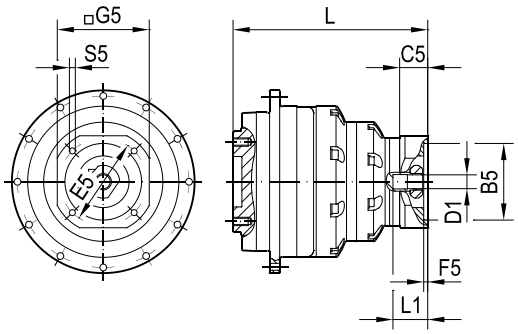

min. □ 120 Fig. B

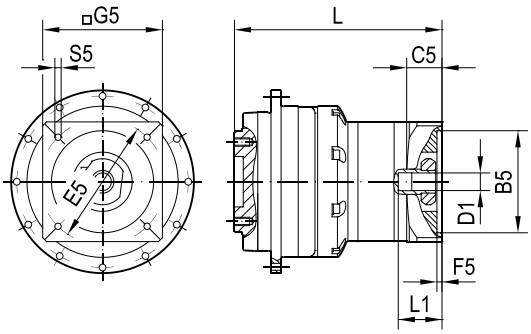

(→ ■ -)	D1	L1	B5	E5	G5	L	C5	F5	S5	Fig.
H.04.03	14	37.4	50	95	95	184	24.2	3.5	M6x15	A
H.05.03	14	37.4	60	75	95	184	24.2	3.5	M6x15	A
H.06.03	14	37.4	80	100	95	184	24.2	4	M6x15	A
H.07.02	14	37.4	60	75	95	184	24.2	3.5	M5x12	A
H.08.01	19	42	80	100	95	191	28	4	M6x15	A
H.08.02	19	41	80	100	120	190	27	4	M6x15	B
H.09.01	19	42	95	115	105	191	28	4	M8x18	A
H.09.02	19	42	95	115	120	191	28	4	M8x18	B
H.10.02	19	42	95	130	120	191	28	4	M8x18	B
H.11.02	19	42	110	130	120	191	28	4	M8x18	B
H.12.01	24	50	95	115	120	206	33.5	5	M8x18	B
H.13.01	24	50	95	130	120	206	33.5	5	M8x18	B
H.14.01	24	50	110	130	120	206	33.5	5	M8x18	B
H.15.01	24	51	110	165	143	207	35	5	M10x24	B
H.16.01	24	51	130	165	143	207	35	5	M10x24	B
H.16.03	24	51	130	165	140	207	35	5	M10x24	B
H.17.01	24	52	180	215	192	208	36	5	M10x24	B
H.18.01	28	60	130	165	143	214	45.5	5	M10x24	B
H.18.02	28	60	130	165	138	214	45.5	5	M10x24	B
H.19.01	28	60	180	215	192	214	45.5	5	M12x28	B
H.19.02	28	60	180	215	215	214	45.5	5	M12x28	B
H.32.02	14	37.4	60	82	95	184	24.2	3.5	M5x12	A

27781410/EN – 03/2022

			P5BG61			
Gear ratio			**4**	**5**	**7**	**10**
Short-time duty						
Peak torque	M_{a_pk}	Nm	1920	1920	1880	1610
Peak motor speed	n_{e_pk}	min^{-1}	2925	3660	4500	4500
Peak radial force	$F_{R_a_pk}$	N	30700	30700	30700	30700
Peak axial force	$F_{A_a_pk}$	N	10000	10000	10000	10000
Peak breakdown torque	$M_{K_a_pk}$	Nm	3280	3280	3280	3280
Continuous duty						
Nominal torque	M_{a_N}	Nm	940	910	860	900
Nominal motor speed	n_{e_N}	min^{-1}	1400	1500	2000	2000
Nominal radial force	$F_{R_a_N}$	N	18700	19600	19900	22100
Nominal axial force	$F_{A_a_N}$	N	8540	8540	8540	8540
Nominal breakdown torque	$M_{K_a_N}$	Nm	1970	2070	2100	2340
General technical data						
Torsional rigidity	c_{tr}	Nm/ arcmin	550	523	436	298
Rotational clearance	φ	arcmin	≤ 1 (R) – 3 (N)			
Pull-out rigidity	c_{pr}	Nm/ arcmin	1513			
Service life	L	h	> 20000			
Cyclic duration factor	ED	%	≤ 60			
Gear unit temperature	T_{max}	°C	90			
Ambient temperature	T_{amb}	°C	-15 – +40			
Nominal ambient temperature	T_{amb_N}	°C	20			
Efficiency	η	%	97	97	97	97
Sound pressure level	L_P	dB (A)	≤ 68	≤ 68	≤ 68	≤ 68
Degree of protection	–	–	IP65			
No-load speed	M_{e_0}	Nm	16.00	12.00	8.80	6.00
Emergency stop torque	M_{a_es}	Nm	3070	3070	3070	3070
Mass moment of inertia incl. adapter						
Coupling Ø 38 mm	J	10^{-4} kgm^2	43.62	33.97	17.00	12.28
Coupling Ø 48 mm	J	10^{-4} kgm^2	49.52	39.87	30.88	26.15
Coupling Ø 55 mm	J	10^{-4} kgm^2	76.41	66.76	58.06	53.34
Mass incl. adapter						
Coupling Ø min – max	m	kg	31.97 – 43.75			

27781410/EN – 03/2022

P5BG61..

57 055 00 19

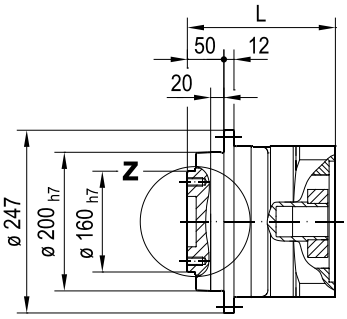

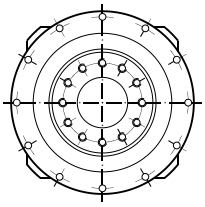

PxBG

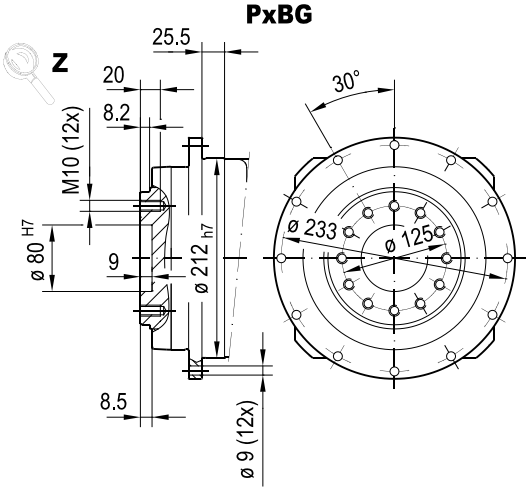

PxCG

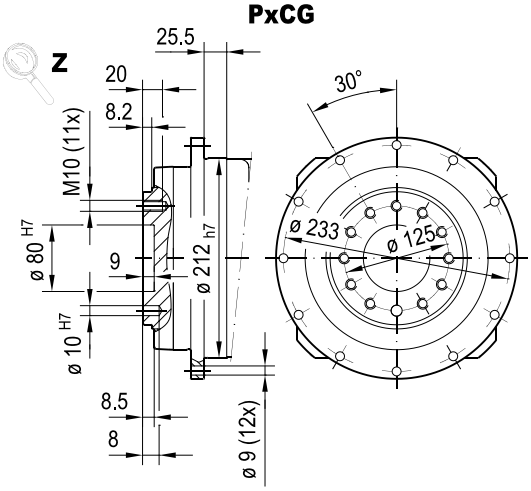

min. □ 215 Fig. B

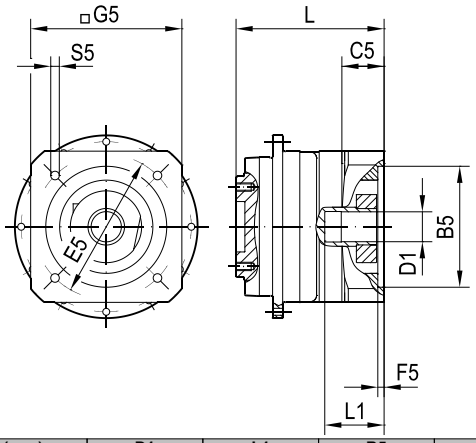

min. □ 260 Fig. C

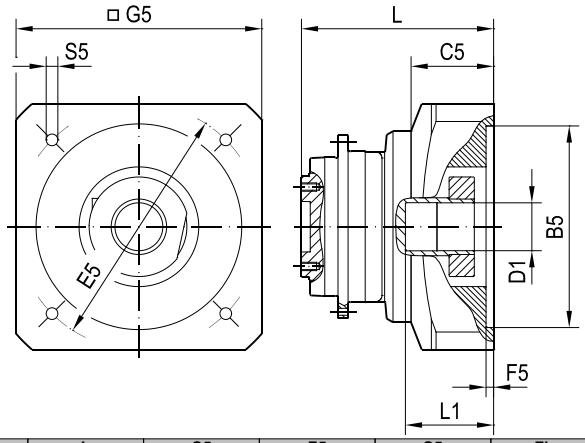

(→ ■ -)	D1	L1	B5	E5	G5	L	C5	F5	S5	Fig.
H.24.02	38	80	114.3	200	215	183	57.5	5	M12x28	B
H.25.03	38	80	180	215	215	183	57.5	5	M12x28	B
H.26.02	38	80	230	265	240	183	57.5	5	M12x28	B
H.27.01	48	85	180	215	215	188	54.5	7	M12x28	B
H.28.01	48	110	230	265	240	213	79.5	7	M12x28	B
H.30.01	48	82	250	300	262	185	51.5	7	M16x36	B
H.31.01	55	110	300	350	316	219	72	7	M16x36	C
H.33.01	55	110	250	300	260	219	72	7	M16x36	C

27781410/EN – 03/2022

			P5BG62								
Gear ratio			**16**	**20**	**25**	**28**	**35**	**40**	**50**	**70**	**100**
Short-time duty											
Peak torque	M_{a_pk}	Nm	1760	1760	1760	1760	1760	1760	1760	1760	1530
Peak motor speed	n_{e_pk}	min^{-1}	5625	5625	5625	5625	5625	5625	5625	5625	5625
Peak radial force	$F_{R_a_pk}$	N	30700	30700	30700	30700	30700	30700	30700	30700	30700
Peak axial force	$F_{A_a_pk}$	N	10000	10000	10000	10000	10000	10000	10000	10000	10000
Peak breakdown torque	$M_{K_a_pk}$	Nm	3280	3280	3280	3280	3280	3280	3280	3280	3280
Continuous duty											
Nominal torque	M_{a_N}	Nm	1200	1240	1270	1250	1400	1310	1400	1400	1230
Nominal motor speed	n_{e_N}	min^{-1}	2500	2500	2500	2500	2500	2500	2900	3200	3400
Nominal radial force	$F_{R_a_N}$	N	23800	25500	26100	26100	26100	26100	26100	26100	26100
Nominal axial force	$F_{A_a_N}$	N	8540	8540	8540	8540	8540	8540	8540	8540	8540
Nominal breakdown torque	$M_{K_a_N}$	Nm	2520	2690	2780	2780	2780	2780	2780	2780	2780
General technical data											
Torsional rigidity	c_{tr}	Nm/ arcmin	585	574	557	543	548	492	506	442	343
Rotational clearance	φ	arcmin	≤ 1 (R) – 3 (N)								
Pull-out rigidity	c_{pr}	Nm/ arcmin	1513								
Service life	L	h	> 20000								
Cyclic duration factor	ED	%	≤ 60								
Gear unit temperature	T_{max}	°C	90								
Ambient temperature	T_{amb}	°C	-15 – +40								
Nominal ambient temperature	T_{amb_N}	°C	20								
Efficiency	η	%	94	94	94	94	94	94	94	94	94
Sound pressure level	L_P	dB (A)	≤ 61	≤ 61	≤ 61	≤ 61	≤ 61	≤ 61	≤ 61	≤ 61	≤ 61
Degree of protection	–	–	IP65								
No-load speed	M_{e_0}	Nm	7.00	5.80	5.20	4.50	3.10	3.00	2.50	2.00	1.80
Emergency stop torque	M_{a_es}	Nm	3070	3070	3070	3070	3070	3070	3070	3070	3070
Mass moment of inertia incl. adapter											
Coupling Ø 24 mm	J	10^{-4} kgm^2	7.27	5.19	4.80	3.51	3.31	2.58	2.49	2.40	2.35
Coupling Ø 32 mm	J	10^{-4} kgm^2	9.94	8.06	7.68	6.33	6.14	5.43	5.33	5.24	5.19
Coupling Ø 38 mm	J	10^{-4} kgm^2	12.92	11.04	10.66	9.36	9.16	8.35	8.25	8.16	8.12
Coupling Ø 48 mm	J	10^{-4} kgm^2	26.79	24.92	24.53	23.23	23.03	22.33	22.23	22.14	22.09
Mass incl. adapter											
Coupling Ø min – max	m	kg	32.25 – 44.43								

27781410/EN – 03/2022

P5BG62..

57 056 00 19

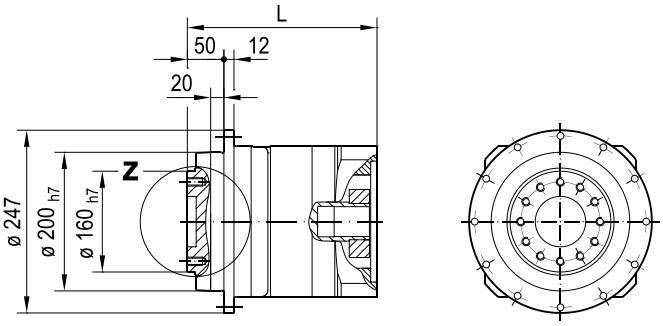

PxBG

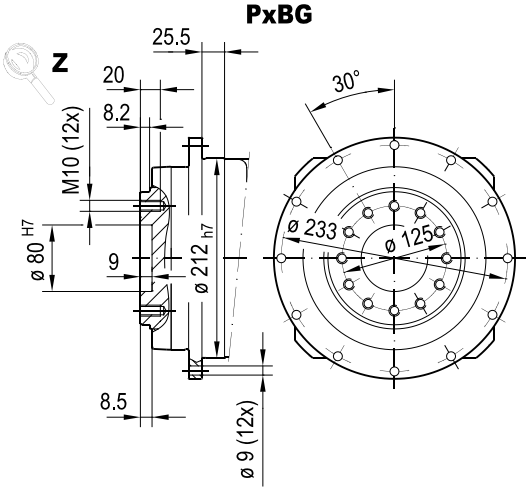

PxCG

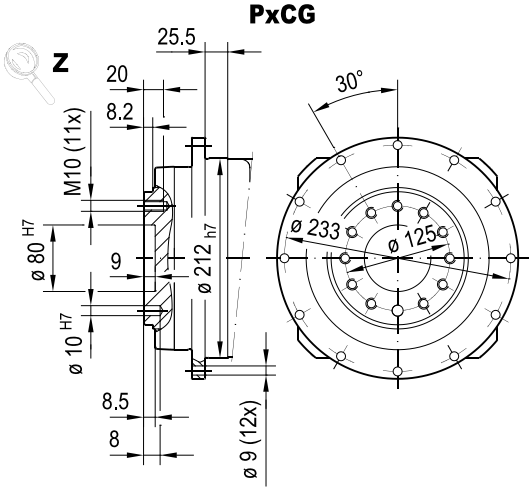

min. □ 152 Fig. A

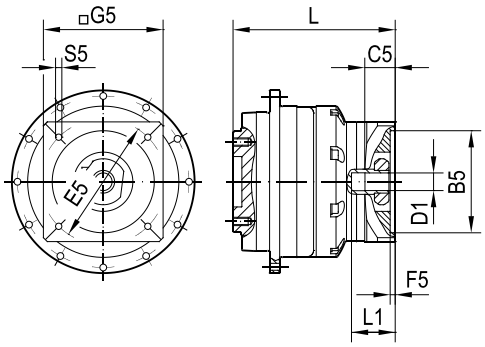

min. □ 215 Fig. B

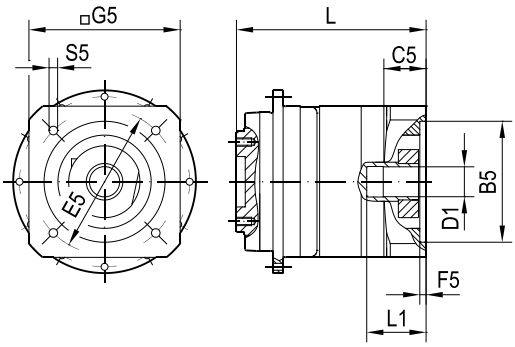

(→)	D1	L1	B5	E5	G5	L	C5	F5	S5	Fig.
H.12.02	24	50	95	115	152	198	34.5	5	M8x18	A
H.13.02	24	50	95	130	152	198	34.5	5	M8x18	A
H.14.02	24	50	110	130	152	198	34.5	5	M8x18	A
H.15.02	24	50	110	165	152	199	35	5	M10x24	A
H.16.02	24	50	130	165	152	199	35	5	M10x24	A
H.17.02	24	50	180	215	192	199	35	5	M10x24	A
H.20.01	32	65	130	165	152	211	43	5	M10x24	A
H.21.01	32	65	130	215	192	211	43	5	M12x28	A
H.22.01	32	62	155	190	163	208	40	5	M10x24	A
H.23.01	32	65	180	215	190	211	43	5	M12x28	A
H.23.02	32	65	180	215	215	211	43	5	M12x28	A
H.24.01	38	80	114.3	200	180	226	58.5	5	M12x28	A
H.24.02	38	80	114.3	200	215	233	57.5	5	M12x28	B
H.25.01	38	80	180	215	192	226	58.5	5	M12x28	A
H.25.03	38	80	180	215	215	233	57.5	5	M12x28	B
H.25.04	38	80	180	215	190	226	58.5	5	M12x28	A
H.26.02	38	80	230	265	240	233	57.5	5	M12x28	B
H.27.01	48	85	180	215	215	238	54.5	7	M12x28	B
H.28.01	48	110	230	265	240	263	79.5	7	M12x28	B
H.30.01	48	82	250	300	262	235	51.5	7	M16x36	B

27781410/EN – 03/2022

			P5BG63									
Gear ratio			**64**	**80**	**112**	**125**	**140**	**160**	**175**	**196**	**200**	**245**
Short-time duty												
Peak torque	M_{a_pk}	Nm	1760	1760	1760	1760	1760	1760	1760	1760	1760	1760
Peak motor speed	n_{e_pk}	min^{-1}	5625	5625	5625	5625	5625	5625	5625	5625	5625	5625
Peak radial force	$F_{R_a_pk}$	N	30700	30700	30700	30700	30700	30700	30700	30700	30700	30700
Peak axial force	$F_{A_a_pk}$	N	10000	10000	10000	10000	10000	10000	10000	10000	10000	10000
Peak breakdown torque	$M_{K_a_pk}$	Nm	3280	3280	3280	3280	3280	3280	3280	3280	3280	3280
Continuous duty												
Nominal torque	M_{a_N}	Nm	1230	1260	1290	1310	1330	1350	1380	1400	1410	1430
Nominal motor speed	n_{e_N}	min^{-1}	3000	3000	3000	3000	3000	3000	3000	3000	3000	3000
Nominal radial force	$F_{R_a_N}$	N	26100	26100	26100	26100	26100	26100	26100	26100	26100	26100
Nominal axial force	$F_{A_a_N}$	N	8540	8540	8540	8540	8540	8540	8540	8540	8540	8540
Nominal breakdown torque	$M_{K_a_N}$	Nm	2780	2780	2780	2780	2780	2780	2780	2780	2780	2780
General technical data												
Torsional rigidity	c_{tr}	Nm/ arcmin	590	587	585	557	574	583	551	560	574	541
Rotational clearance	φ	arcmin	≤ 2 (R) – 3 (N)									
Pull-out rigidity	c_{pr}	Nm/ arcmin	1513									
Service life	L	h	> 20000									
Cyclic duration factor	ED	%	≤ 60									
Gear unit temperature	T_{max}	°C	90									
Ambient temperature	T_{amb}	°C	-15 – +40									
Nominal ambient temperature	T_{amb_N}	°C	20									
Efficiency	η	%	92	92	92	92	92	92	92	92	92	92
Sound pressure level	L_P	dB (A)	≤ 61	≤ 61	≤ 58	≤ 58	≤ 58	≤ 58	≤ 58	≤ 58	≤ 58	≤ 58
Degree of protection	–	–	IP65									
No-load speed	M_{e_0}	Nm	3.80	3.20	2.50	2.30	2.10	1.90	1.80	1.70	1.60	1.40
Emergency stop torque	M_{a_es}	Nm	3070	3070	3070	3070	3070	3070	3070	3070	3070	3070
Mass moment of inertia incl. adapter												
Coupling Ø 19 mm	J	10^{-4} kgm^2	1.84	1.36	0.90	1.27	0.86	0.66	0.85	0.83	0.64	0.82
Coupling Ø 24 mm	J	10^{-4} kgm^2	3.11	2.63	2.17	2.54	2.13	1.93	2.12	2.09	1.91	2.09
Coupling Ø 28 mm	J	10^{-4} kgm^2	3.66	3.18	2.72	3.09	2.68	2.49	2.68	2.65	2.47	2.65
Coupling Ø 32 mm	J	10^{-4} kgm^2	5.94	5.45	5.01	5.36	4.97	4.77	4.96	4.94	4.76	4.93
Coupling Ø 38 mm	J	10^{-4} kgm^2	8.86	8.38	7.94	8.29	7.90	7.70	7.89	7.86	7.68	7.86
Mass incl. adapter												
Coupling Ø min – max	m	kg	32.67 – 40.48									

27781410/EN – 03/2022

P5BG63..

57 080 00 19

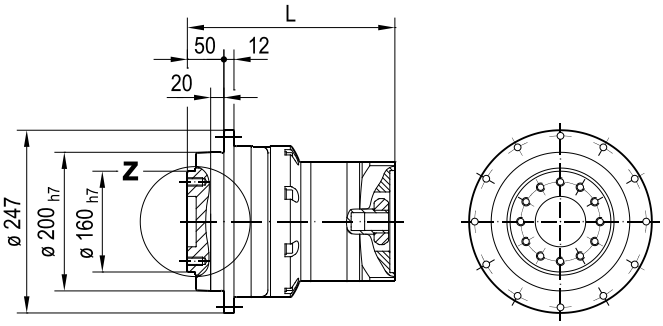

PxBG

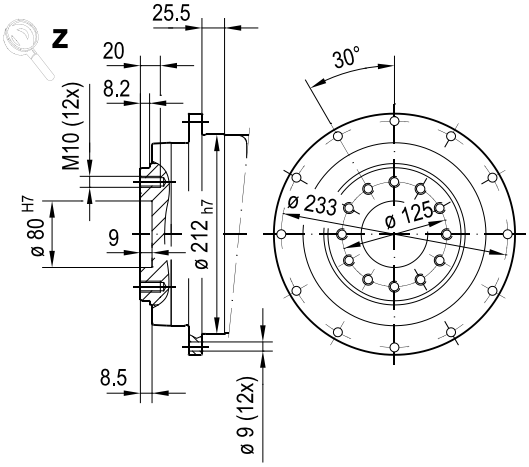

PxCG

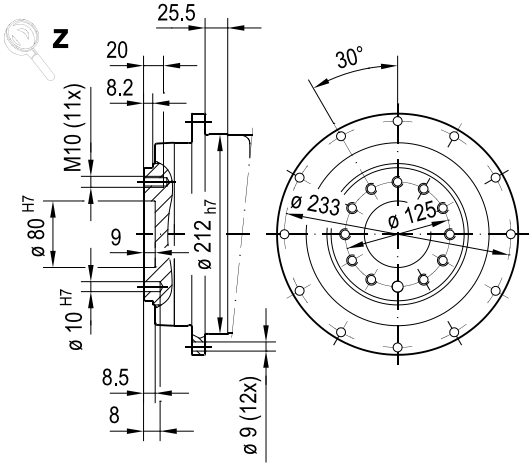

min. □ 120 Fig. A

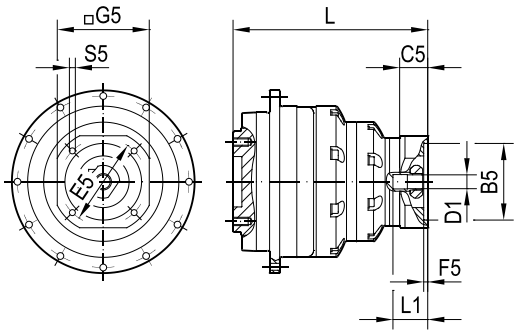

min. □ 152 Fig. B

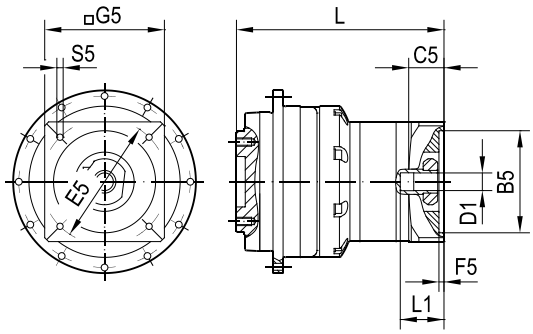

(→ ■ -)	D1	L1	B5	E5	G5	L	C5	F5	S5	Fig.
H.08.02	19	41	80	100	120	223	27	4	M6x15	A
H.09.02	19	42	95	115	120	224	28	4	M8x18	A
H.10.02	19	42	95	130	120	224	28	4	M8x18	A
H.11.02	19	42	110	130	120	224	28	4	M8x18	A
H.12.01	24	50	95	115	120	239	33.5	5	M8x18	A
H.12.02	24	50	95	115	152	239	34.5	5	M8x18	B
H.13.01	24	50	95	130	120	239	33.5	5	M8x18	A
H.13.02	24	50	95	130	152	239	34.5	5	M8x18	B
H.14.01	24	50	110	130	120	239	33.5	5	M8x18	A
H.14.02	24	50	110	130	152	239	34.5	5	M8x18	B
H.15.01	24	51	110	165	143	240	35	5	M10x24	A
H.15.02	24	50	110	165	152	239	35	5	M10x24	B
H.16.01	24	51	130	165	143	240	35	5	M10x24	A
H.16.02	24	50	130	165	152	239	35	5	M10x24	B
H.16.03	24	51	130	165	140	240	35	5	M10x24	A
H.17.02	24	50	180	215	192	239	35	5	M10x24	B
H.18.01	28	60	130	165	143	247	45.5	5	M10x24	A
H.18.02	28	60	130	165	138	247	45.5	5	M10x24	A
H.20.01	32	65	130	165	152	251	43	5	M10x24	B
H.21.01	32	65	130	215	192	251	43	5	M12x28	B
H.22.01	32	62	155	190	163	248	40	5	M10x24	B
H.23.01	32	65	180	215	190	251	43	5	M12x28	B
H.23.02	32	65	180	215	215	251	43	5	M12x28	B
H.24.01	38	80	114.3	200	180	267	58.5	5	M12x28	B
H.25.01	38	80	180	215	192	267	58.5	5	M12x28	B
H.25.02	38	80	180	215	215	267	58.5	5	M12x28	B
H.25.04	38	80	180	215	190	267	58.5	5	M12x28	B
H.26.01	38	80	230	265	240	267	58.5	5	M12x28	B

27781410/EN – 03/2022

			P5BG63							
Gear ratio			**250**	**280**	**343**	**350**	**400**	**490**	**500**	**700**
Short-time duty										
Peak torque	M_{a_pk}	Nm	1760	1760	1760	1760	1760	1760	1760	1760
Peak motor speed	n_{e_pk}	min^{-1}	5625	5625	5625	5625	5625	5625	5625	5625
Peak radial force	$F_{R_a_pk}$	N	30700	30700	30700	30700	30700	30700	30700	30700
Peak axial force	$F_{A_a_pk}$	N	10000	10000	10000	10000	10000	10000	10000	10000
Peak breakdown torque	$M_{K_a_pk}$	Nm	3280	3280	3280	3280	3280	3280	3280	3280
Continuous duty										
Nominal torque	M_{a_N}	Nm	1440	1460	1470	1470	1470	1470	1470	1470
Nominal motor speed	n_{e_N}	min^{-1}	3000	3000	3000	3000	3000	3000	3000	3000
Nominal radial force	$F_{R_a_N}$	N	26100	26100	26100	26100	26100	26100	26100	26100
Nominal axial force	$F_{A_a_N}$	N	8540	8540	8540	8540	8540	8540	8540	8540
Nominal breakdown torque	$M_{K_a_N}$	Nm	2780	2780	2780	2780	2780	2780	2780	2780
General technical data										
Torsional rigidity	c_{tr}	Nm/ arcmin	560	557	424	542	517	424	520	416
Rotational clearance	φ	arcmin	≤ 2 (R) – 3 (N)							
Pull-out rigidity	c_{pr}	Nm/ arcmin	1513							
Service life	L	h	> 20000							
Cyclic duration factor	ED	%	≤ 60							
Gear unit temperature	T_{max}	°C	90							
Ambient temperature	T_{amb}	°C	-15 – +40							
Nominal ambient temperature	T_{amb_N}	°C	20							
Efficiency	η	%	92	92	92	92	92	92	92	92
Sound pressure level	L_P	dB (A)	≤ 58	≤ 58	≤ 58	≤ 58	≤ 58	≤ 58	≤ 58	≤ 58
Degree of protection	–	–	IP65							
No-load speed	M_{e_0}	Nm	1.40	1.30	1.10	1.10	0.97	0.83	0.82	0.64
Emergency stop torque	M_{a_es}	Nm	3070	3070	3070	3070	3070	3070	3070	3070
Mass moment of inertia incl. adapter										
Coupling Ø 19 mm	J	10^{-4} kgm^2	0.64	0.63	0.82	0.62	0.62	0.62	0.62	0.62
Coupling Ø 24 mm	J	10^{-4} kgm^2	1.91	1.90	2.09	1.89	1.89	1.89	1.89	1.88
Coupling Ø 28 mm	J	10^{-4} kgm^2	2.46	2.45	2.64	2.45	2.44	2.45	2.44	2.44
Coupling Ø 32 mm	J	10^{-4} kgm^2	4.75	4.74	4.93	4.74	4.73	4.73	4.73	4.73
Coupling Ø 38 mm	J	10^{-4} kgm^2	7.68	7.66	7.85	7.66	7.65	7.66	7.65	7.65
Mass incl. adapter										
Coupling Ø min – max	m	kg	32.67 – 40.48							

27781410/EN – 03/2022

P5BG63..

57 080 00 19

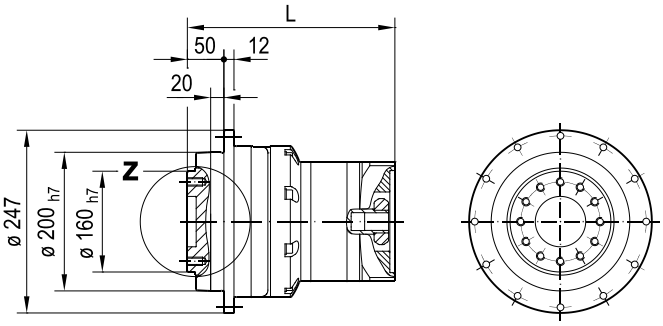

PxBG

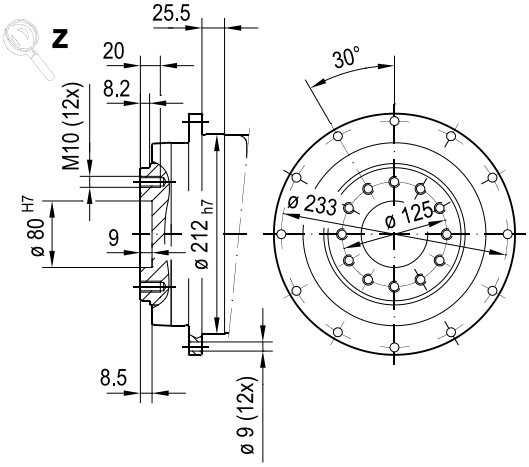

PxCG

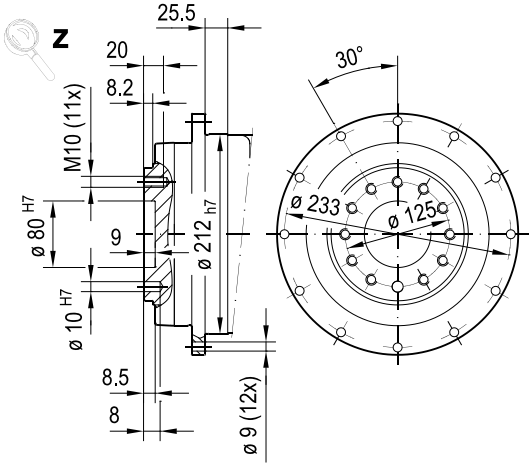

min. □ 120 Fig. A

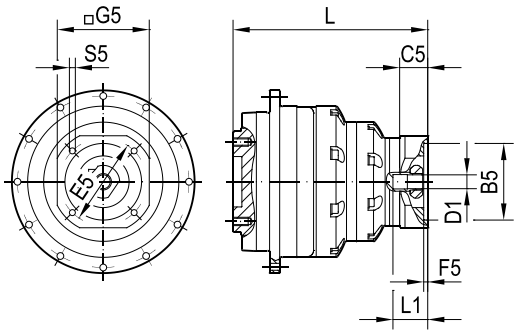

min. □ 152 Fig. B

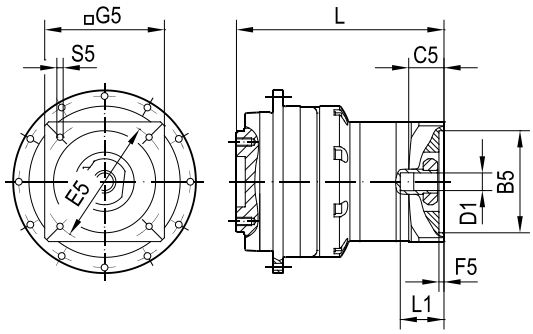

(→ ■ -)	D1	L1	B5	E5	G5	L	C5	F5	S5	Fig.
H.08.02	19	41	80	100	120	223	27	4	M6x15	A
H.09.02	19	42	95	115	120	224	28	4	M8x18	A
H.10.02	19	42	95	130	120	224	28	4	M8x18	A
H.11.02	19	42	110	130	120	224	28	4	M8x18	A
H.12.01	24	50	95	115	120	239	33.5	5	M8x18	A
H.12.02	24	50	95	115	152	239	34.5	5	M8x18	B
H.13.01	24	50	95	130	120	239	33.5	5	M8x18	A
H.13.02	24	50	95	130	152	239	34.5	5	M8x18	B
H.14.01	24	50	110	130	120	239	33.5	5	M8x18	A
H.14.02	24	50	110	130	152	239	34.5	5	M8x18	B
H.15.01	24	51	110	165	143	240	35	5	M10x24	A
H.15.02	24	50	110	165	152	239	35	5	M10x24	B
H.16.01	24	51	130	165	143	240	35	5	M10x24	A
H.16.02	24	50	130	165	152	239	35	5	M10x24	B
H.16.03	24	51	130	165	140	240	35	5	M10x24	A
H.17.02	24	50	180	215	192	239	35	5	M10x24	B
H.18.01	28	60	130	165	143	247	45.5	5	M10x24	A
H.18.02	28	60	130	165	138	247	45.5	5	M10x24	A
H.20.01	32	65	130	165	152	251	43	5	M10x24	B
H.21.01	32	65	130	215	192	251	43	5	M12x28	B
H.22.01	32	62	155	190	163	248	40	5	M10x24	B
H.23.01	32	65	180	215	190	251	43	5	M12x28	B
H.23.02	32	65	180	215	215	251	43	5	M12x28	B
H.24.01	38	80	114.3	200	180	267	58.5	5	M12x28	B
H.25.01	38	80	180	215	192	267	58.5	5	M12x28	B
H.25.02	38	80	180	215	215	267	58.5	5	M12x28	B
H.25.04	38	80	180	215	190	267	58.5	5	M12x28	B
H.26.01	38	80	230	265	240	267	58.5	5	M12x28	B

27781410/EN – 03/2022

			P5BG71		
Gear ratio			**5**	**7**	**10**
Short-time duty					
Peak torque	M_{a_pk}	Nm	4200	3960	2280
Peak motor speed	n_{e_pk}	min^{-1}	2970	3000	3000
Peak radial force	$F_{R_a_pk}$	N	27700	27700	27700
Peak axial force	$F_{A_a_pk}$	N	33000	33000	33000
Peak breakdown torque	$M_{K_a_pk}$	Nm	3900	3900	3900
Continuous duty					
Nominal torque	M_{a_N}	Nm	1990	1830	1790
Nominal motor speed	n_{e_N}	min^{-1}	1000	1400	1700
Nominal radial force	$F_{R_a_N}$	N	23500	23500	23500
Nominal axial force	$F_{A_a_N}$	N	23500	23500	24600
Nominal breakdown torque	$M_{K_a_N}$	Nm	3310	3310	3310
General technical data					
Torsional rigidity	c_{tr}	Nm/ arcmin	947	743	542
Rotational clearance	φ	arcmin	≤ 1 (R) – 3 (N)		
Pull-out rigidity	c_{pr}	Nm/ arcmin	4680		
Service life	L	h	> 20000		
Cyclic duration factor	ED	%	≤ 60		
Gear unit temperature	T_{max}	°C	90		
Ambient temperature	T_{amb}	°C	-15 – +40		
Nominal ambient temperature	T_{amb_N}	°C	20		
Efficiency	η	%	95	95	95
Sound pressure level	L_P	dB (A)	≤ 64	≤ 64	≤ 64
Degree of protection	–	–	IP65		
No-load speed	M_{e_0}	Nm	20.00	14.00	8.80
Emergency stop torque	M_{a_es}	Nm	9900	7250	5790
Mass moment of inertia incl. adapter					
Coupling Ø 55 mm	J	10^{-4} kgm^2	106.04	77.12	62.98
Mass incl. adapter					
Coupling Ø min – max	m	kg	65.34 – 65.72		

27781410/EN – 03/2022

P5BG71..

57 057 01 19

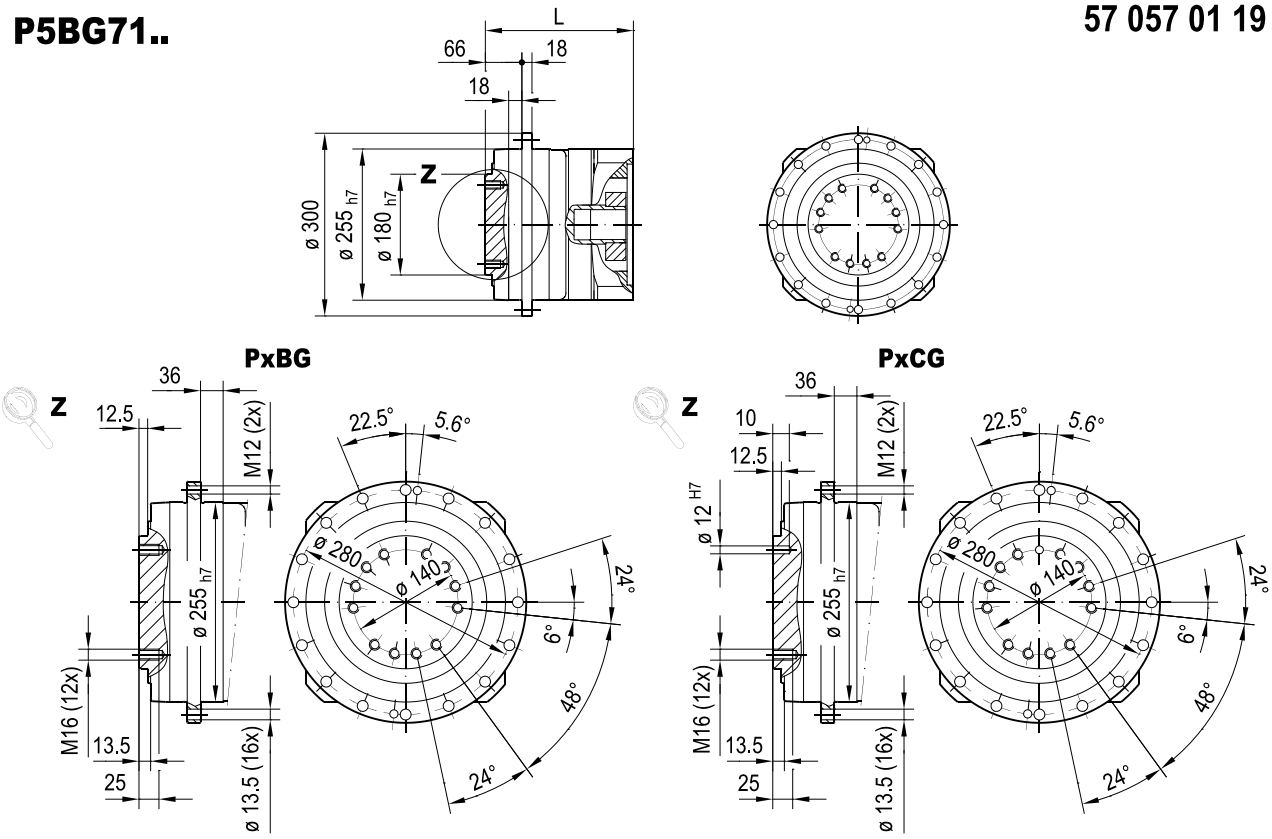

min. □ 260 Fig. B

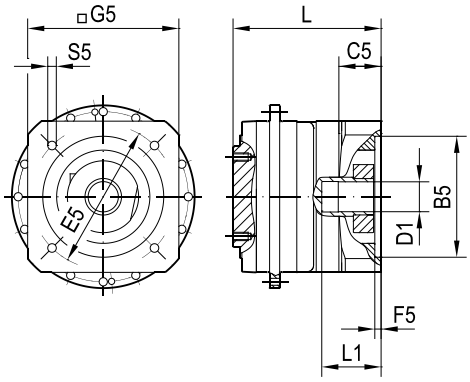

(→)	D1	L1	B5	E5	G5	L	C5	F5	S5	Fig.
H.31.01	55	110	300	350	316	245	72	7	M16x36	B
H.33.01	55	110	250	300	260	245	72	7	M16x36	B

27781410/EN – 03/2022

			P5BG72					
Gear ratio			**20**	**25**	**35**	**50**	**70**	**100**
Short-time duty								
Peak torque	M_{a_pk}	Nm	3850	3940	3940	3600	3630	2800
Peak motor speed	n_{e_pk}	min^{-1}	4375	4375	4375	4375	4375	4375
Peak radial force	$F_{R_a_pk}$	N	41900	41900	41900	41900	41900	41900
Peak axial force	$F_{A_a_pk}$	N	33000	33000	33000	33000	33000	33000
Peak breakdown torque	$M_{K_a_pk}$	Nm	5900	5900	5900	5900	5900	5900
Continuous duty								
Nominal torque	M_{a_N}	Nm	1350	1670	1710	1720	2330	2240
Nominal motor speed	n_{e_N}	min^{-1}	2000	2000	2000	2300	2400	2500
Nominal radial force	$F_{R_a_N}$	N	35600	35600	35600	35600	35600	35600
Nominal axial force	$F_{A_a_N}$	N	28000	28000	28000	28000	28000	28000
Nominal breakdown torque	$M_{K_a_N}$	Nm	5010	5010	5010	5010	5010	5010
General technical data								
Torsional rigidity	c_{tr}	Nm/ arcmin	1001	1008	990	944	717	562
Rotational clearance	φ	arcmin	≤ 2 (R) – 3 (N)					
Pull-out rigidity	c_{pr}	Nm/ arcmin	4680					
Service life	L	h	> 20000					
Cyclic duration factor	ED	%	≤ 60					
Gear unit temperature	T_{max}	°C	90					
Ambient temperature	T_{amb}	°C	-15 – +40					
Nominal ambient temperature	T_{amb_N}	°C	20					
Efficiency	η	%	94	94	94	94	94	94
Sound pressure level	L_P	dB (A)	≤ 61	≤ 61	≤ 61	≤ 61	≤ 61	≤ 61
Degree of protection	–	–	IP65					
No-load speed	M_{e_0}	Nm	6.70	5.50	4.00	3.80	3.00	2.40
Emergency stop torque	M_{a_es}	Nm	9900	9900	9900	9900	7300	5790
Mass moment of inertia incl. adapter								
Coupling Ø 38 mm	J	10^{-4} kgm^2	26.05	19.85	13.86	10.74	10.42	10.27
Coupling Ø 48 mm	J	10^{-4} kgm^2	39.91	33.72	27.74	24.61	24.28	24.14
Coupling Ø 55 mm	J	10^{-4} kgm^2	66.81	60.61	54.92	51.80	51.47	51.33
Mass incl. adapter								
Coupling Ø min – max	m	kg	69.22 – 81.87					

27781410/EN – 03/2022

P5BG72..

57 058 01 19

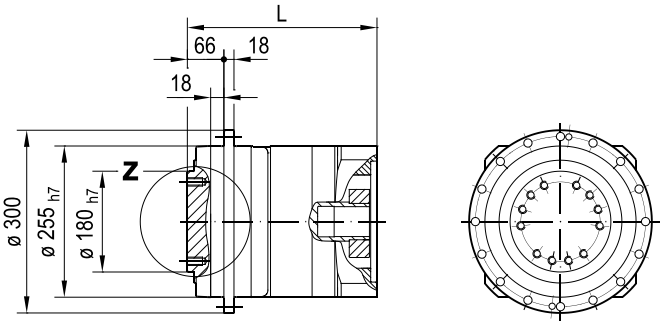

PxBG

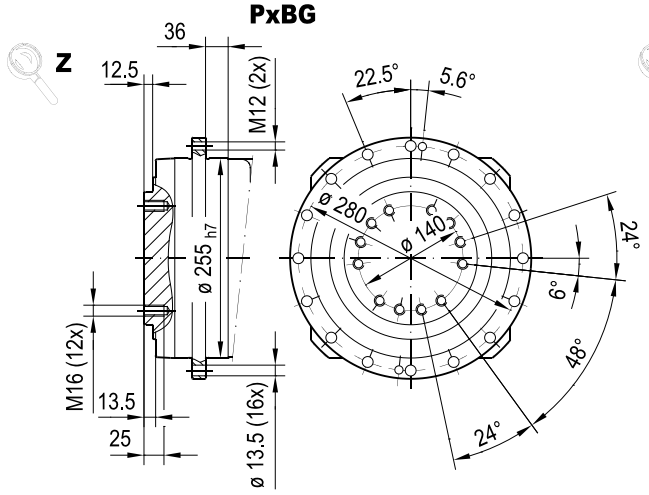

PxCG

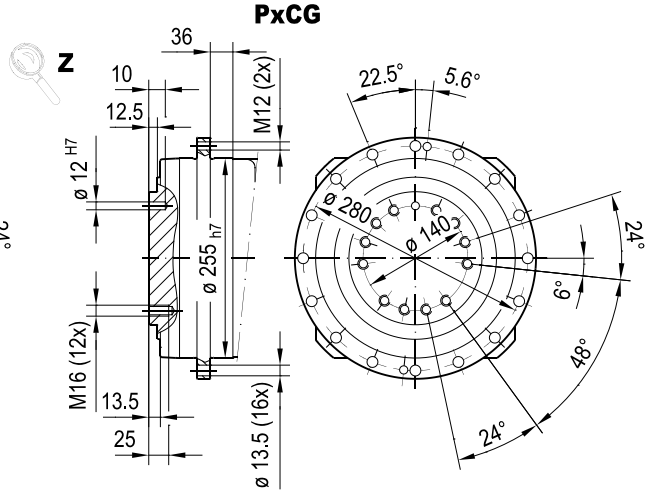

min. □ 215 Fig. A

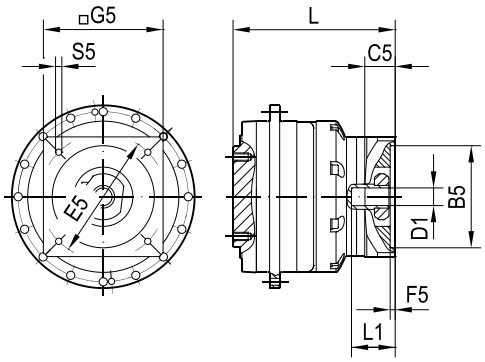

min. □ 260 Fig. B

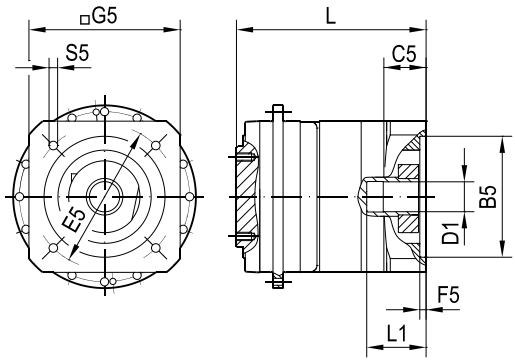

(→ 🕮 -)	D1	L1	B5	E5	G5	L	C5	F5	S5	Fig.
H.24.02	38	80	114.3	200	215	291	57.5	5	M12x28	A
H.25.03	38	80	180	215	215	291	57.5	5	M12x28	A
H.26.02	38	80	230	265	240	291	57.5	5	M12x28	A
H.27.01	48	85	180	215	215	296	54.5	7	M12x28	A
H.28.01	48	110	230	265	240	321	79.5	7	M12x28	A
H.30.01	48	82	250	300	262	293	51.5	7	M16x36	A
H.31.01	55	110	300	350	316	327	72	7	M16x36	B
H.33.01	55	110	250	300	260	327	72	7	M16x36	B

27781410/EN – 03/2022

			P5BG73											
Gear ratio			**80**	**125**	**140**	**175**	**200**	**245**	**250**	**343**	**350**	**490**	**500**	**700**
Short-time duty														
Peak torque	M_{a_pk}	Nm	3850	3940	3850	3940	3850	3940	3940	3700	3940	3690	3600	3630
Peak motor speed	n_{e_pk}	min^{-1}	4375	4375	4375	4375	4375	4375	4375	4375	4375	4375	4375	4375
Peak radial force	$F_{R_a_pk}$	N	41900	41900	41900	41900	41900	41900	41900	41900	41900	41900	41900	41900
Peak axial force	$F_{A_a_pk}$	N	33000	33000	33000	33000	33000	33000	33000	33000	33000	33000	33000	33000
Peak breakdown torque	$M_{K_a_pk}$	Nm	5900	5900	5900	5900	5900	5900	5900	5900	5900	5900	5900	5900
Continuous duty														
Nominal torque	M_{a_N}	Nm	2240	2270	2300	2340	2370	2400	2430	2450	2450	2450	2450	2450
Nominal motor speed	n_{e_N}	min^{-1}	2000	2000	2000	2000	2000	2000	2000	2000	2000	2000	2000	2000
Nominal radial force	$F_{R_a_N}$	N	35600	35600	35600	35600	35600	35600	35600	35600	35600	35600	35600	35600
Nominal axial force	$F_{A_a_N}$	N	28000	28000	28000	28000	28000	28000	28000	28000	28000	28000	28000	28000
Nominal breakdown torque	$M_{K_a_N}$	Nm	5010	5010	5010	5010	5010	5010	5010	5010	5010	5010	5010	5010
General technical data														
Torsional rigidity	c_{tr}	Nm/ arcmin	244	245	244	245	245	244	245	764	244	767	243	762
Rotational clearance	φ	arcmin	≤ 2 (R) – 3 (N)											
Pull-out rigidity	c_{pr}	Nm/ arcmin	4680											
Service life	L	h	> 20000											
Cyclic duration factor	ED	%	≤ 60											
Gear unit temperature	T_{max}	°C	90											
Ambient temperature	T_{amb}	°C	-15 – +40											
Nominal ambient temperature	T_{amb_N}	°C	20											
Efficiency	η	%	92	92	92	92	92	92	92	92	92	92	92	92
Sound pressure level	L_P	dB (A)	≤ 61	≤ 57	≤ 57	≤ 57	≤ 57	≤ 57	≤ 57	≤ 57	≤ 57	≤ 57	≤ 57	≤ 57
Degree of protection	–	–	IP65											
No-load speed	M_{e_0}	Nm	4.20	2.60	2.40	1.90	1.60	1.30	1.30	0.95	0.92	0.66	0.64	0.45
Emergency stop torque	M_{a_es}	Nm	9900	9900	9900	9900	9900	9900	9900	7310	9900	7310	9900	7310
Mass moment of inertia incl. adapter														
Coupling Ø 24 mm	J	10^{-4} kgm^2	6.46	4.56	3.31	3.18	2.49	3.06	2.42	3.05	2.36	2.36	2.33	2.33
Coupling Ø 32 mm	J	10^{-4} kgm^2	9.34	7.43	6.14	6.01	5.33	5.89	5.27	5.87	5.21	5.20	5.18	5.17
Coupling Ø 38 mm	J	10^{-4} kgm^2	12.32	10.41	9.17	9.04	8.25	8.92	8.19	8.90	8.13	8.13	8.10	8.10
Coupling Ø 48 mm	J	10^{-4} kgm^2	26.19	24.29	23.03	22.91	22.23	22.78	22.17	22.77	22.11	22.10	22.08	22.07
Mass incl. adapter														
Coupling Ø min – max	m	kg	69.44 – 81.81											

27781410/EN – 03/2022

P5BG73..

57 081 01 19

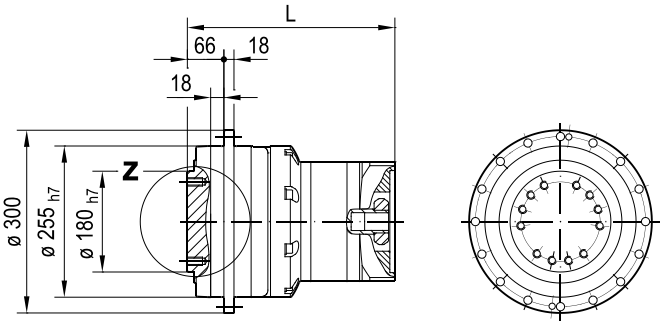

PxBG

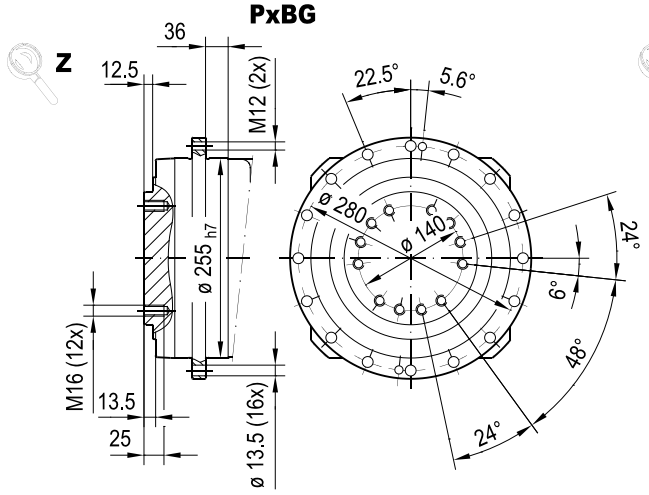

PxCG

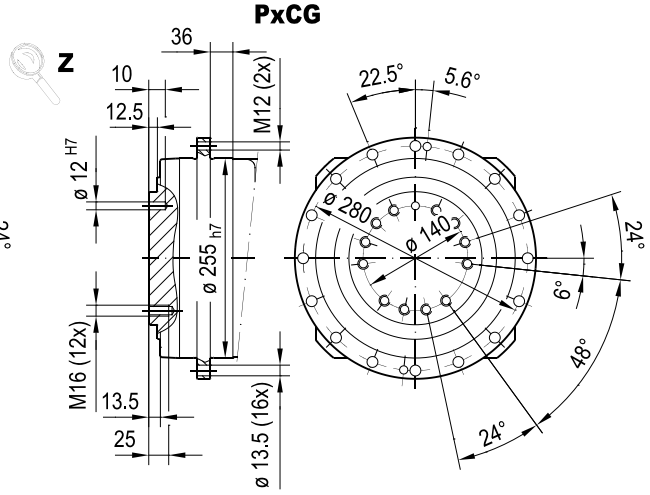

min. □ 152 Fig. A

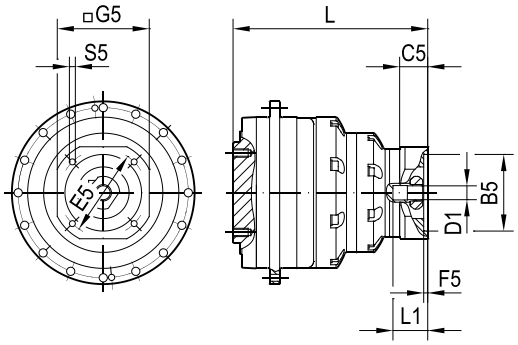

min. □ 215 Fig. B

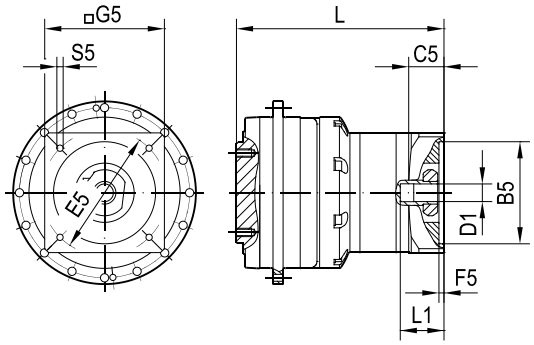

(→ ■ -)	D1	L1	B5	E5	G5	L	C5	F5	S5	Fig.
H.12.02	24	50	95	115	152	306	34.5	5	M8x18	A
H.13.02	24	50	95	130	152	306	34.5	5	M8x18	A
H.14.02	24	50	110	130	152	306	34.5	5	M8x18	A
H.15.02	24	50	110	165	152	306	35	5	M10x24	A
H.16.02	24	50	130	165	152	306	35	5	M10x24	A
H.17.02	24	50	180	215	192	306	35	5	M10x24	A
H.20.01	32	65	130	165	152	318	43	5	M10x24	A
H.21.01	32	65	130	215	192	318	43	5	M12x28	A
H.22.01	32	62	155	190	163	315	40	5	M10x24	A
H.23.01	32	65	180	215	190	318	43	5	M12x28	A
H.23.02	32	65	180	215	215	318	43	5	M12x28	A
H.24.01	38	80	114.3	200	180	334	58.5	5	M12x28	A
H.24.02	38	80	114.3	200	215	340	57.5	5	M12x28	B
H.25.01	38	80	180	215	192	334	58.5	5	M12x28	A
H.25.03	38	80	180	215	215	340	57.5	5	M12x28	B
H.25.04	38	80	180	215	190	334	58.5	5	M12x28	A
H.26.02	38	80	230	265	240	340	57.5	5	M12x28	B
H.27.01	48	85	180	215	215	345	54.5	7	M12x28	B
H.28.01	48	110	230	265	240	370	79.5	7	M12x28	B
H.30.01	48	82	250	300	262	342	51.5	7	M16x36	B

27781410/EN – 03/2022

			P5NG21				
Gear ratio			**3**	**4**	**5**	**7**	**10**
Short-time duty							
Peak torque	M_{a_pk}	Nm	66	66	66	60	42
Peak motor speed	n_{e_pk}	min^{-1}	5400	7200	7500	7500	7500
Peak radial force	$F_{R_a_pk}$	N	2100	2100	2100	2100	2100
Peak axial force	$F_{A_a_pk}$	N	2200	2200	2200	2200	2200
Peak breakdown torque	$M_{K_a_pk}$	Nm	110	110	110	110	110
Continuous duty							
Nominal torque	M_{a_N}	Nm	28	28	28	28	28
Nominal motor speed	n_{e_N}	min^{-1}	4000	4000	4000	4000	4000
Nominal radial force	$F_{R_a_N}$	N	1780	1780	1780	1780	1780
Nominal axial force	$F_{A_a_N}$	N	1870	1870	1870	1870	1870
Nominal breakdown torque	$M_{K_a_N}$	Nm	93	93	93	93	93
General technical data							
Torsional rigidity	c_{tr}	Nm/ arcmin	5	4	4	4	3
Rotational clearance	φ	arcmin	≤ 2 (R) – 4 (N)				
Pull-out rigidity	c_{pr}	Nm/ arcmin	19				
Service life	L	h	> 20000				
Cyclic duration factor	ED	%	≤ 60				
Gear unit temperature	T_{max}	°C	90				
Ambient temperature	T_{amb}	°C	-15 – +40				
Nominal ambient temperature	T_{amb_N}	°C	20				
Efficiency	η	%	98	98	98	98	98
Sound pressure level	L_P	dB (A)	≤ 58	≤ 58	≤ 58	≤ 58	≤ 58
Degree of protection	–	–	IP65				
No-load speed	M_{e_0}	Nm	0.68	0.52	0.48	0.34	0.32
Emergency stop torque	M_{a_es}	Nm	105	105	105	105	90
Mass moment of inertia incl. adapter							
Coupling Ø 11 mm	J	10^{-4} kgm^2	0.21	0.14	0.11	0.09	0.07
Coupling Ø 14 mm	J	10^{-4} kgm^2	0.35	0.28	0.25	0.23	0.22
Coupling Ø 19 mm	J	10^{-4} kgm^2	0.58	0.51	0.48	0.46	0.44
Mass incl. adapter							
Coupling Ø min – max	m	kg	1.88 – 2.81				

27781410/EN – 03/2022

P5NG21..

57 037 00 19

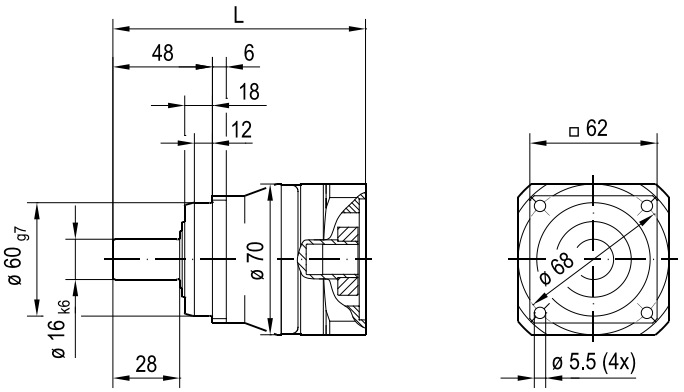

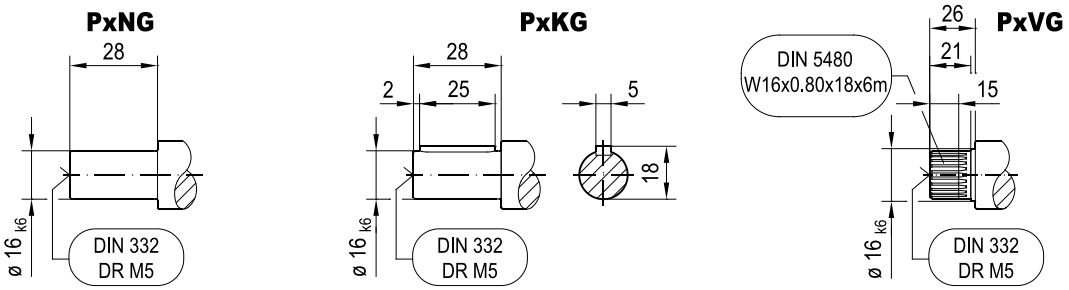

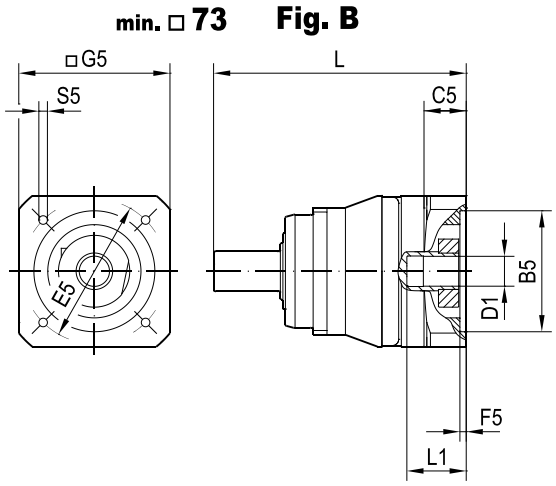

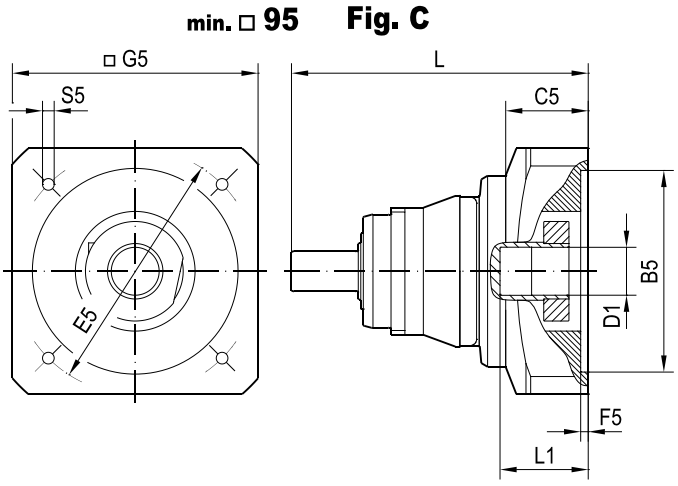

(→ ■ -)	D1	L1	B5	E5	G5	L	C5	F5	S5	Fig.
H.01.02	11	37.6	40	63	73	142	22.3	0	M4x12	B
H.02.03	11	37.6	60	75	73	142	22.3	3.5	M5x12	B
H.03.02	11	37.6	60	90	73	142	22.3	3.5	M5x12	B
H.04.02	14	37.4	50	95	95	145	25.2	3.5	M6x15	B
H.05.02	14	37.4	60	75	73	145	25.2	3.5	M6x15	B
H.06.02	14	37.4	80	100	95	145	25.2	4	M6x15	B
H.06.05	14	37.4	80	100	88	145	25.2	4	M6x15	B
H.07.01	14	37.4	60	75	73	145	25.2	3.5	M5x12	B
H.08.01	19	42	80	100	95	152	28	4	M6x15	C
H.09.01	19	42	95	115	105	152	28	4	M8x18	C
H.10.01	19	42	95	130	120	152	28	4	M8x18	C
H.11.01	19	42	110	130	120	152	28	4	M8x18	C
H.32.01	14	37.4	60	82	73	145	25.2	3.5	M5x12	B

27781410/EN – 03/2022

			P5NG22										
Gear ratio			**12**	**16**	**20**	**25**	**30**	**28**	**35**	**40**	**50**	**70**	**100**
Short-time duty													
Peak torque	M_{a_pk}	Nm	66	66	66	66	66	66	66	66	66	60	42
Peak motor speed	n_{e_pk}	min^{-1}	8500	8500	8500	8500	8500	8500	8500	8500	8500	8500	8500
Peak radial force	$F_{R_a_pk}$	N	2100	2100	2100	2100	2100	2100	2100	2100	2100	2100	2100
Peak axial force	$F_{A_a_pk}$	N	2200	2200	2200	2200	2200	2200	2200	2200	2200	2200	2200
Peak breakdown torque	$M_{K_a_pk}$	Nm	110	110	110	110	110	110	110	110	110	110	110
Continuous duty													
Nominal torque	M_{a_N}	Nm	39	48	50	49	43	50	50	50	50	50	36
Nominal motor speed	n_{e_N}	min^{-1}	5500	5500	5500	5500	5500	5500	5500	5500	5500	5500	5500
Nominal radial force	$F_{R_a_N}$	N	1780	1780	1780	1780	1780	1780	1780	1780	1780	1780	1780
Nominal axial force	$F_{A_a_N}$	N	1870	1870	1870	1870	1870	1870	1870	1870	1870	1870	1870
Nominal breakdown torque	$M_{K_a_N}$	Nm	93	93	93	93	93	93	93	93	93	93	93
General technical data													
Torsional rigidity	c_{tr}	Nm/ arcmin	5	5	5	4	4	4	4	4	4	4	4
Rotational clearance	φ	arcmin	≤ 4 (R) – 6 (N)										
Pull-out rigidity	c_{pr}	Nm/ arcmin	19										
Service life	L	h	> 20000										
Cyclic duration factor	ED	%	≤ 60										
Gear unit temperature	T_{max}	°C	90										
Ambient temperature	T_{amb}	°C	-15 – +40										
Nominal ambient temperature	T_{amb_N}	°C	20										
Efficiency	η	%	94	94	94	94	94	94	94	94	94	94	94
Sound pressure level	L_P	dB (A)	≤ 57	≤ 57	≤ 57	≤ 57	≤ 57	≤ 57	≤ 57	≤ 57	≤ 57	≤ 57	≤ 57
Degree of protection	–	–	IP65										
No-load speed	M_{e_0}	Nm	0.30	0.28	0.25	0.23	0.21	0.22	0.20	0.20	0.19	0.17	0.18
Emergency stop torque	M_{a_es}	Nm	105	105	105	105	105	105	105	105	105	105	90
Mass moment of inertia incl. adapter													
Coupling Ø 11 mm	J	10^{-4} kgm^2	0.11	0.10	0.09	0.09	0.07	0.07	0.07	0.07	0.07	0.07	0.07
Coupling Ø 14 mm	J	10^{-4} kgm^2	0.25	0.25	0.23	0.23	0.21	0.22	0.22	0.21	0.21	0.21	0.21
Mass incl. adapter													
Coupling Ø min – max	m	kg	2.34 – 2.72										

27781410/EN – 03/2022

P5NG22..

57 038 00 19

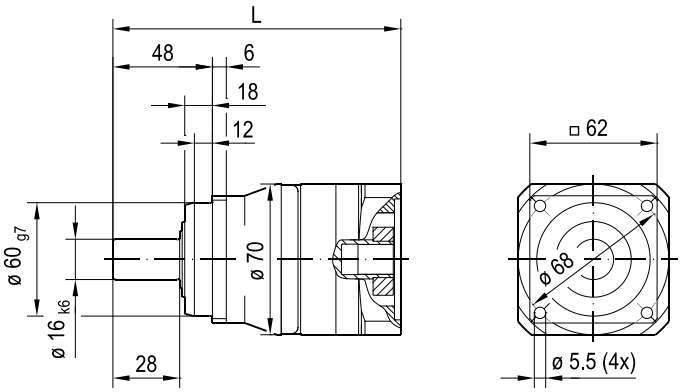

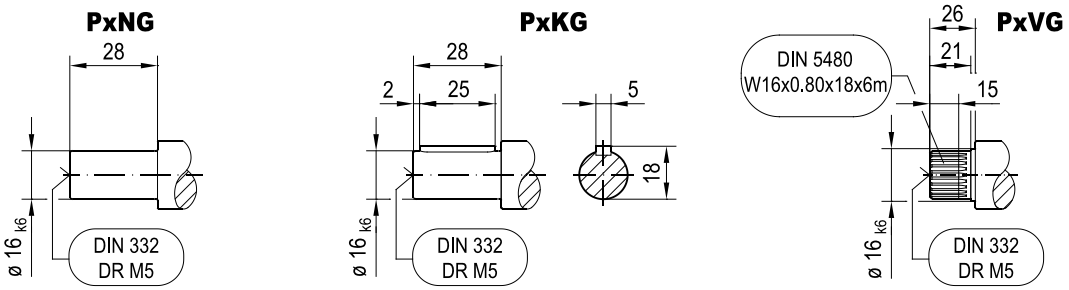

min. □ 55 **Fig. A**

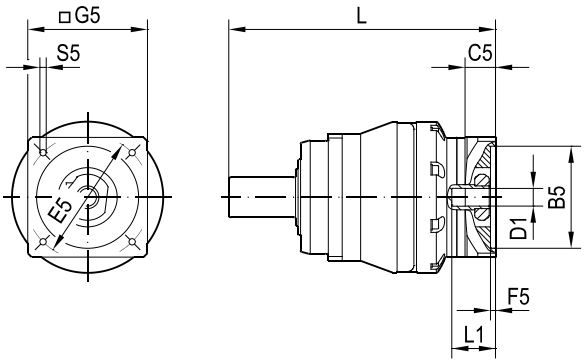

min. □ 73 **Fig. B**

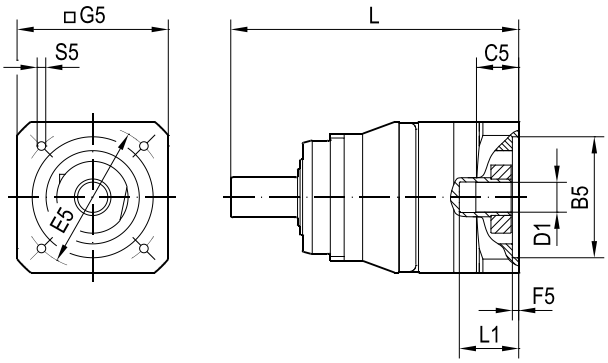

(→ ■ -)	D1	L1	B5	E5	G5	L	C5	F5	S5	Fig.
H.01.03	11	37.6	40	63	55	165	19.7	3.5	M4x12	A
H.02.04	11	37.6	60	75	62	165	19.7	3.5	M5x12	A
H.02.05	11	37.6	60	75	73	165	19.7	3.5	M5x12	A
H.03.03	11	37.6	60	90	73	165	19.7	3.5	M5x12	A
H.04.02	14	37.4	50	95	95	167	25.2	3.5	M6x15	B
H.05.02	14	37.4	60	75	73	167	25.2	3.5	M6x15	B
H.06.02	14	37.4	80	100	95	167	25.2	4	M6x15	B
H.06.05	14	37.4	80	100	88	167	25.2	4	M6x15	B
H.07.01	14	37.4	60	75	73	167	25.2	3.5	M5x12	B
H.32.01	14	37.4	60	82	73	167	25.2	3.5	M5x12	B

27781410/EN – 03/2022

			P5NG31				
Gear ratio			**3**	**4**	**5**	**7**	**10**
Short-time duty							
Peak torque	M_{a_pk}	Nm	107	138	138	138	119
Peak motor speed	n_{e_pk}	min^{-1}	5400	7200	7500	7500	7500
Peak radial force	$F_{R_a_pk}$	N	4410	4410	4410	4410	4410
Peak axial force	$F_{A_a_pk}$	N	3510	3510	3510	3510	3510
Peak breakdown torque	$M_{K_a_pk}$	Nm	235	235	235	235	235
Continuous duty							
Nominal torque	M_{a_N}	Nm	66	85	85	85	85
Nominal motor speed	n_{e_N}	min^{-1}	2900	2900	2900	3100	3100
Nominal radial force	$F_{R_a_N}$	N	3350	3650	3740	3740	3740
Nominal axial force	$F_{A_a_N}$	N	2980	2980	2980	2980	2980
Nominal breakdown torque	$M_{K_a_N}$	Nm	200	200	200	200	200
General technical data							
Torsional rigidity	c_{tr}	Nm/ arcmin	11	11	11	10	9
Rotational clearance	φ	arcmin	≤ 2 (R) – 4 (N)				
Pull-out rigidity	c_{pr}	Nm/ arcmin	45				
Service life	L	h	> 20000				
Cyclic duration factor	ED	%	≤ 60				
Gear unit temperature	T_{max}	°C	90				
Ambient temperature	T_{amb}	°C	-15 – +40				
Nominal ambient temperature	T_{amb_N}	°C	20				
Efficiency	η	%	97	97	97	97	97
Sound pressure level	L_P	dB (A)	≤ 59	≤ 59	≤ 59	≤ 59	≤ 59
Degree of protection	–	–	IP65				
No-load speed	M_{e_0}	Nm	1.50	1.40	0.96	0.72	0.52
Emergency stop torque	M_{a_es}	Nm	145	194	260	260	260
Mass moment of inertia incl. adapter							
Coupling Ø 14 mm	J	10^{-4} kgm^2	0.73	0.49	0.39	0.30	0.25
Coupling Ø 19 mm	J	10^{-4} kgm^2	0.96	0.72	0.62	0.53	0.48
Coupling Ø 24 mm	J	10^{-4} kgm^2	2.23	1.99	1.89	1.80	1.75
Mass incl. adapter							
Coupling Ø min – max	m	kg	3.52 – 6.55				

27781410/EN – 03/2022

P5NG31..

57 001 00 19

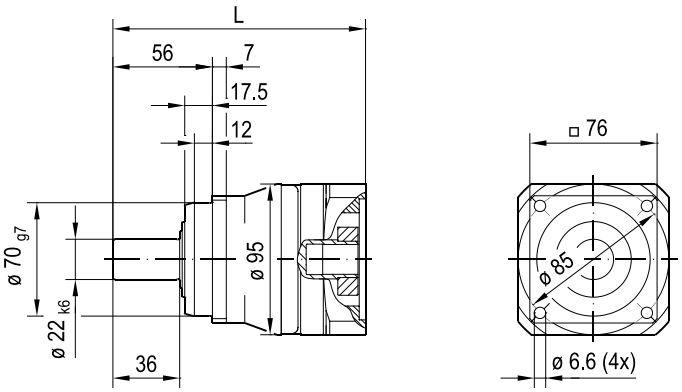

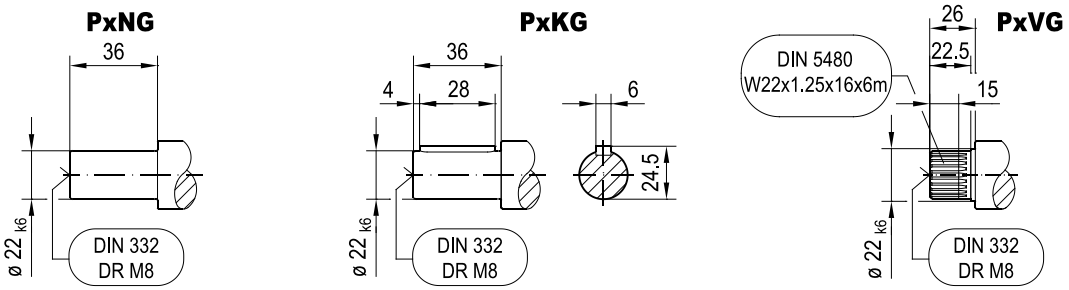

min. □ 95 Fig. B

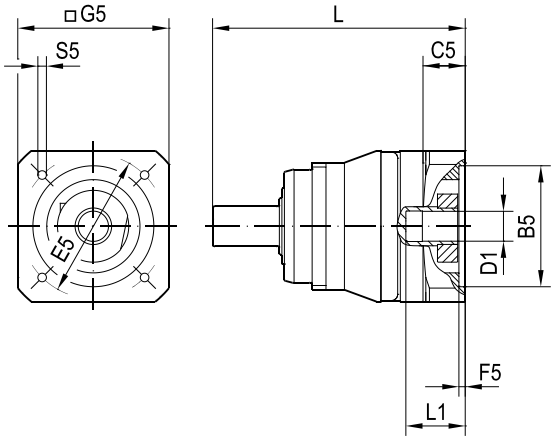

min. □ 120 Fig. C

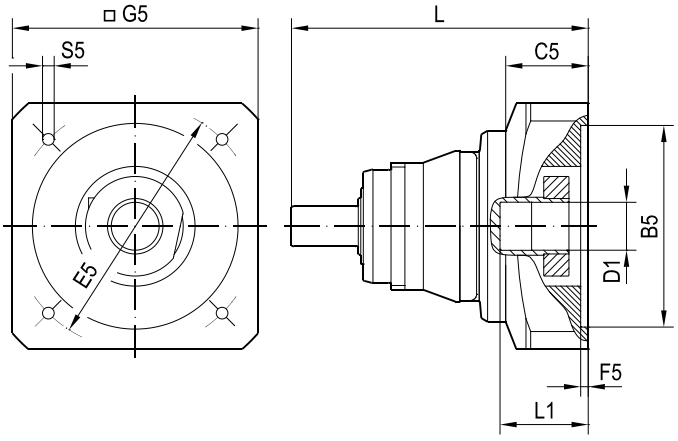

(→ ■ -)	D1	L1	B5	E5	G5	L	C5	F5	S5	Fig.
H.04.03	14	37.4	50	95	95	162	24.2	3.5	M6x15	B
H.05.03	14	37.4	60	75	95	162	24.2	3.5	M6x15	B
H.06.03	14	37.4	80	100	95	162	24.2	4	M6x15	B
H.07.02	14	37.4	60	75	95	162	24.2	3.5	M5x12	B
H.08.01	19	42	80	100	95	170	28	4	M6x15	B
H.09.01	19	42	95	115	105	170	28	4	M8x18	B
H.10.01	19	42	95	130	120	170	28	4	M8x18	B
H.11.01	19	42	110	130	120	170	28	4	M8x18	B
H.12.01	24	50	95	115	120	184	33.5	5	M8x18	C
H.13.01	24	50	95	130	120	184	33.5	5	M8x18	C
H.14.01	24	50	110	130	120	184	33.5	5	M8x18	C
H.15.01	24	51	110	165	143	186	35	5	M10x24	C
H.16.01	24	51	130	165	143	186	35	5	M10x24	C
H.16.03	24	51	130	165	140	186	35	5	M10x24	C
H.17.01	24	52	180	215	192	187	36	5	M10x24	C
H.32.02	14	37.4	60	82	95	162	24.2	3.5	M5x12	B

27781410/EN – 03/2022

			P5NG32										
Gear ratio			**12**	**16**	**20**	**25**	**28**	**30**	**35**	**40**	**50**	**70**	**100**
Short-time duty													
Peak torque	M_{a_pk}	Nm	94	132	132	138	132	94	138	132	138	118	110
Peak motor speed	n_{e_pk}	min^{-1}	6500	8500	8500	8500	8500	6500	8500	8500	8500	8500	8500
Peak radial force	$F_{R_a_pk}$	N	4410	4410	4410	4410	4410	4410	4410	4410	4410	4410	4410
Peak axial force	$F_{A_a_pk}$	N	3680	3510	3510	3510	3510	3680	3510	3510	3510	3510	3510
Peak breakdown torque	$M_{K_a_pk}$	Nm	235	235	235	235	235	235	235	235	235	235	235
Continuous duty													
Nominal torque	M_{a_N}	Nm	80	106	106	111	106	80	111	106	111	94	88
Nominal motor speed	n_{e_N}	min^{-1}	3500	3500	3500	3500	3500	3500	3500	3500	3800	4500	4500
Nominal radial force	$F_{R_a_N}$	N	3740	3740	3740	3740	3740	3740	3740	3740	3740	3740	3740
Nominal axial force	$F_{A_a_N}$	N	3130	2980	2980	2980	2980	3130	2980	2980	2980	2980	2980
Nominal breakdown torque	$M_{K_a_N}$	Nm	200	200	200	200	200	200	200	200	200	200	200
General technical data													
Torsional rigidity	c_{tr}	Nm/ arcmin	11	11	11	11	11	10	11	11	11	10	9
Rotational clearance	φ	arcmin	≤ 4 (R) – 6 (N)										
Pull-out rigidity	c_{pr}	Nm/ arcmin	45										
Service life	L	h	> 20000										
Cyclic duration factor	ED	%	≤ 60										
Gear unit temperature	T_{max}	°C	90										
Ambient temperature	T_{amb}	°C	-15 – +40										
Nominal ambient temperature	T_{amb_N}	°C	20										
Efficiency	η	%	97	94	94	94	94	94	94	94	94	94	94
Sound pressure level	L_P	dB (A)	≤ 59	≤ 55	≤ 55	≤ 55	≤ 55	≤ 55	≤ 55	≤ 55	≤ 55	≤ 55	≤ 55
Degree of protection	–	–	IP65										
No-load speed	M_{e_0}	Nm	0.52	0.50	0.41	0.35	0.32	0.32	0.28	0.26	0.23	0.21	0.23
Emergency stop torque	M_{a_es}	Nm	152	260	260	260	260	152	260	260	260	260	260
Mass moment of inertia incl. adapter													
Coupling Ø 11 mm	J	10^{-4} kgm^2	0.16	0.15	0.12	0.11	0.09	0.08	0.09	0.07	0.07	0.07	0.07
Coupling Ø 14 mm	J	10^{-4} kgm^2	0.31	0.29	0.26	0.26	0.23	0.22	0.23	0.22	0.22	0.22	0.21
Coupling Ø 19 mm	J	10^{-4} kgm^2	0.53	0.52	0.49	0.48	0.46	0.45	0.46	0.44	0.44	0.44	0.44
Mass incl. adapter													
Coupling Ø min – max	m	kg	3.85 – 4.87										

27781410/EN – 03/2022

P5NG32..

57 002 00 19

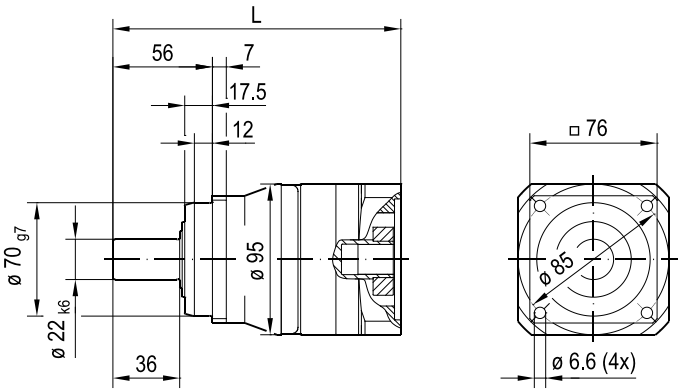

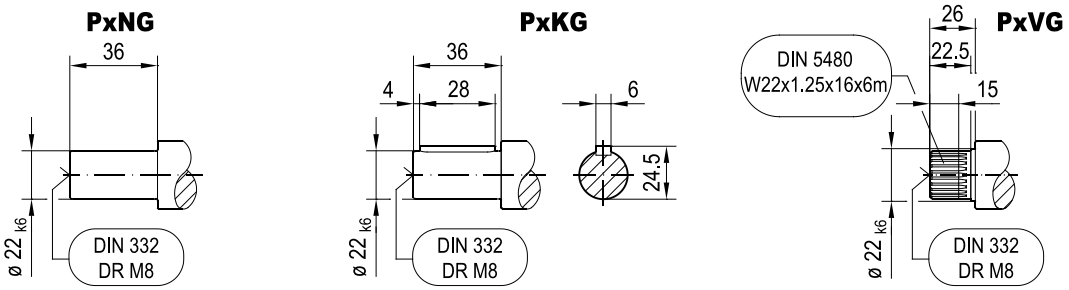

min. □ 73 **Fig. A**

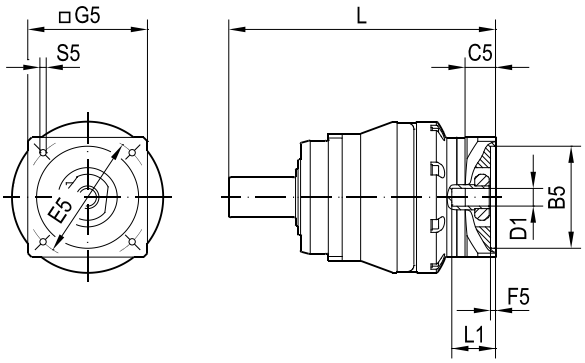

min. □ 95 **Fig. B**

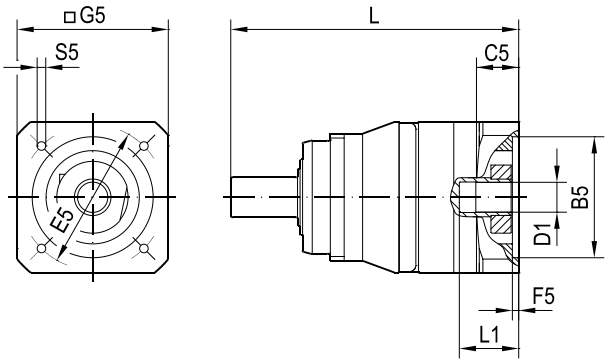

(→ 🕮 -)	D1	L1	B5	E5	G5	L	C5	F5	S5	Fig.
H.01.02	11	37.6	40	63	73	188	22.3	0	M4x12	A
H.02.03	11	37.6	60	75	73	188	22.3	3.5	M5x12	A
H.03.02	11	37.6	60	90	73	188	22.3	3.5	M5x12	A
H.04.02	14	37.4	50	95	95	191	25.2	3.5	M6x15	A
H.04.03	14	37.4	50	95	95	191	24.2	3.5	M6x15	B
H.05.02	14	37.4	60	75	73	191	25.2	3.5	M6x15	A
H.05.03	14	37.4	60	75	95	191	24.2	3.5	M6x15	B
H.06.03	14	37.4	80	100	95	191	24.2	4	M6x15	B
H.06.05	14	37.4	80	100	88	191	25.2	4	M6x15	A
H.07.01	14	37.4	60	75	73	191	25.2	3.5	M5x12	A
H.07.02	14	37.4	60	75	95	191	24.2	3.5	M5x12	B
H.08.01	19	42	80	100	95	198	28	4	M6x15	B
H.09.01	19	42	95	115	105	198	28	4	M8x18	B
H.10.01	19	42	95	130	120	198	28	4	M8x18	B
H.11.01	19	42	110	130	120	198	28	4	M8x18	B
H.32.01	14	37.4	60	82	73	191	25.2	3.5	M5x12	A
H.32.02	14	37.4	60	82	95	191	24.2	3.5	M5x12	B

27781410/EN – 03/2022

			P5NG33							
Gear ratio			**64**	**80**	**112**	**125**	**140**	**160**	**175**	**196**
Short-time duty										
Peak torque	M_{a_pk}	Nm	132	132	132	138	132	132	138	132
Peak motor speed	n_{e_pk}	min^{-1}	8500	8500	8500	8500	8500	8500	8500	8500
Peak radial force	$F_{R_a_pk}$	N	4410	4410	4410	4410	4410	4410	4410	4410
Peak axial force	$F_{A_a_pk}$	N	3510	3510	3510	3510	3510	3510	3510	3510
Peak breakdown torque	$M_{K_a_pk}$	Nm	235	235	235	235	235	235	235	235
Continuous duty										
Nominal torque	M_{a_N}	Nm	106	106	106	111	106	106	111	106
Nominal motor speed	n_{e_N}	min^{-1}	3500	3500	3500	3500	3500	3500	3500	3500
Nominal radial force	$F_{R_a_N}$	N	3740	3740	3740	3740	3740	3740	3740	3740
Nominal axial force	$F_{A_a_N}$	N	2980	2980	2980	2980	2980	2980	2980	2980
Nominal breakdown torque	$M_{K_a_N}$	Nm	200	200	200	200	200	200	200	200
General technical data										
Torsional rigidity	c_{tr}	Nm/ arcmin	11	11	11	10	11	11	10	11
Rotational clearance	φ	arcmin	≤ 4 (R) – 6 (N)							
Pull-out rigidity	c_{pr}	Nm/ arcmin	45							
Service life	L	h	> 20000							
Cyclic duration factor	ED	%	≤ 60							
Gear unit temperature	T_{max}	°C	90							
Ambient temperature	T_{amb}	°C	-15 – +40							
Nominal ambient temperature	T_{amb_N}	°C	20							
Efficiency	η	%	92	92	92	92	92	92	92	92
Sound pressure level	L_P	dB (A)	≤ 56	≤ 56	≤ 56	≤ 56	≤ 56	≤ 56	≤ 56	≤ 56
Degree of protection	–	–	IP65							
No-load speed	M_{e_0}	Nm	0.26	0.22	0.18	0.17	0.16	0.15	0.14	0.13
Emergency stop torque	M_{a_es}	Nm	260	260	260	260	260	260	260	260
Mass moment of inertia incl. adapter										
Coupling Ø 11 mm	J	10^{-4} kgm^2	0.10	0.09	0.07	0.09	0.07	0.07	0.07	0.07
Coupling Ø 14 mm	J	10^{-4} kgm^2	0.25	0.23	0.22	0.23	0.22	0.21	0.22	0.22
Mass incl. adapter										
Coupling Ø min – max	m	kg	4.35 – 4.74							

27781410/EN – 03/2022

P5NG33..

57 067 00 19

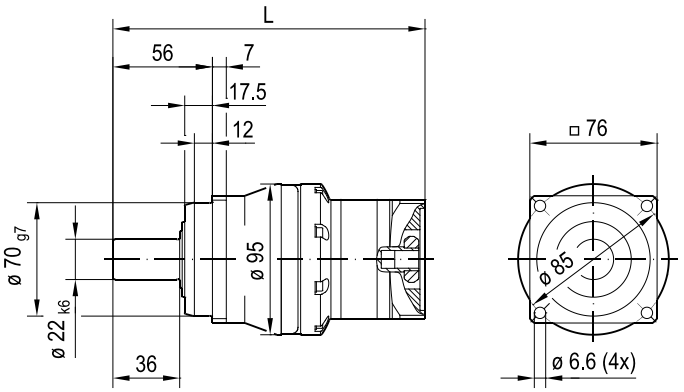

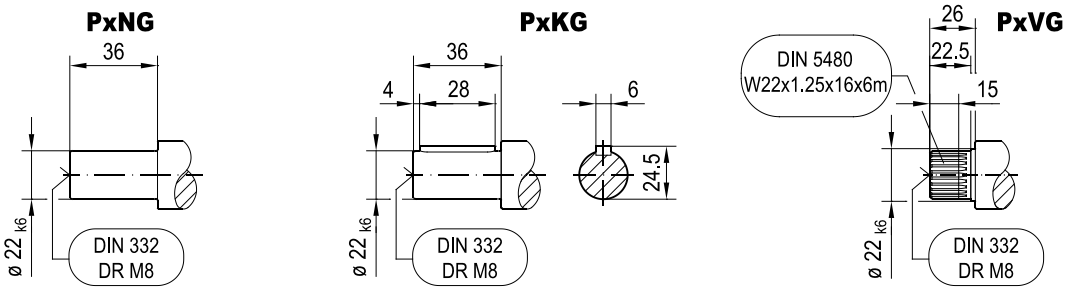

min. □ 55 **Fig. A**

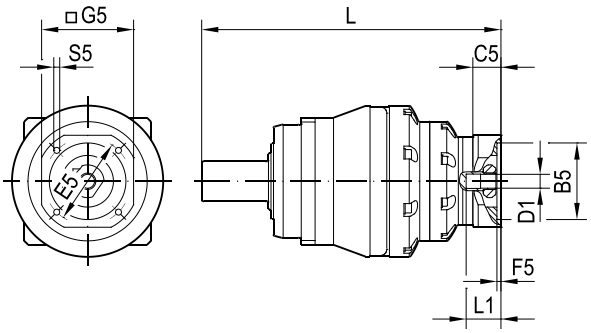

min. □ 73 **Fig. B**

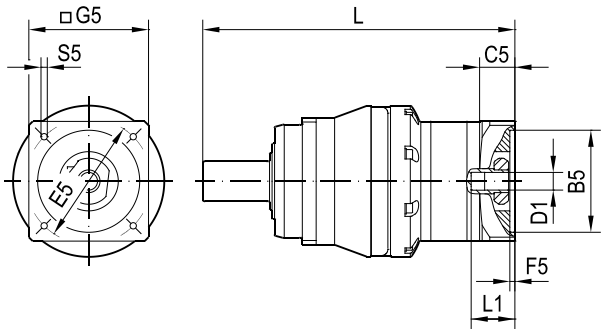

(→ ■ -)	D1	L1	B5	E5	G5	L	C5	F5	S5	Fig.
H.01.03	11	37.6	40	63	55	211	19.7	3.5	M4x12	A
H.02.04	11	37.6	60	75	62	211	19.7	3.5	M5x12	A
H.02.05	11	37.6	60	75	73	211	19.7	3.5	M5x12	A
H.03.03	11	37.6	60	90	73	211	19.7	3.5	M5x12	A
H.04.02	14	37.4	50	95	95	214	25.2	3.5	M6x15	B
H.05.02	14	37.4	60	75	73	214	25.2	3.5	M6x15	B
H.06.02	14	37.4	80	100	95	214	25.2	4	M6x15	B
H.06.05	14	37.4	80	100	88	214	25.2	4	M6x15	B
H.07.01	14	37.4	60	75	73	214	25.2	3.5	M5x12	B
H.32.01	14	37.4	60	82	73	214	25.2	3.5	M5x12	B

27781410/EN – 03/2022

			P5NG33							
Gear ratio			**200**	**245**	**250**	**280**	**350**	**400**	**500**	**700**
Short-time duty										
Peak torque	M_{a_pk}	Nm	132	138	138	132	138	132	138	118
Peak motor speed	n_{e_pk}	min^{-1}	8500	8500	8500	8500	8500	8500	8500	8500
Peak radial force	$F_{R_a_pk}$	N	4410	4410	4410	4410	4410	4410	4410	4410
Peak axial force	$F_{A_a_pk}$	N	3510	3510	3510	3510	3510	3510	3510	3510
Peak breakdown torque	$M_{K_a_pk}$	Nm	235	235	235	235	235	235	235	235
Continuous duty										
Nominal torque	M_{a_N}	Nm	106	111	111	106	111	106	111	94
Nominal motor speed	n_{e_N}	min^{-1}	3500	3500	3500	3500	3500	3500	3800	4500
Nominal radial force	$F_{R_a_N}$	N	3740	3740	3740	3740	3740	3740	3740	3740
Nominal axial force	$F_{A_a_N}$	N	2980	2980	2980	2980	2980	2980	2980	2980
Nominal breakdown torque	$M_{K_a_N}$	Nm	200	200	200	200	200	200	200	200
General technical data										
Torsional rigidity	c_{tr}	Nm/ arcmin	11	10	10	11	10	10	10	10
Rotational clearance	φ	arcmin	≤ 4 (R) – 6 (N)							
Pull-out rigidity	c_{pr}	Nm/ arcmin	45							
Service life	L	h	> 20000							
Cyclic duration factor	ED	%	≤ 60							
Gear unit temperature	T_{max}	°C	90							
Ambient temperature	T_{amb}	°C	-15 – +40							
Nominal ambient temperature	T_{amb_N}	°C	20							
Efficiency	η	%	92	92	92	92	92	92	92	92
Sound pressure level	L_P	dB (A)	≤ 56	≤ 56	≤ 56	≤ 56	≤ 56	≤ 56	≤ 56	≤ 56
Degree of protection	–	–	IP65							
No-load speed	M_{e_0}	Nm	0.13	0.12	0.11	0.11	0.09	0.09	0.08	0.06
Emergency stop torque	M_{a_es}	Nm	260	260	260	260	260	260	260	260
Mass moment of inertia incl. adapter										
Coupling Ø 11 mm	J	10^{-4} kgm^2	0.07	0.07	0.07	0.07	0.07	0.07	0.07	0.07
Coupling Ø 14 mm	J	10^{-4} kgm^2	0.21	0.22	0.21	0.21	0.21	0.21	0.21	0.21
Mass incl. adapter										
Coupling Ø min – max	m	kg	4.35 – 4.74							

27781410/EN – 03/2022

P5NG33..

57 067 00 19

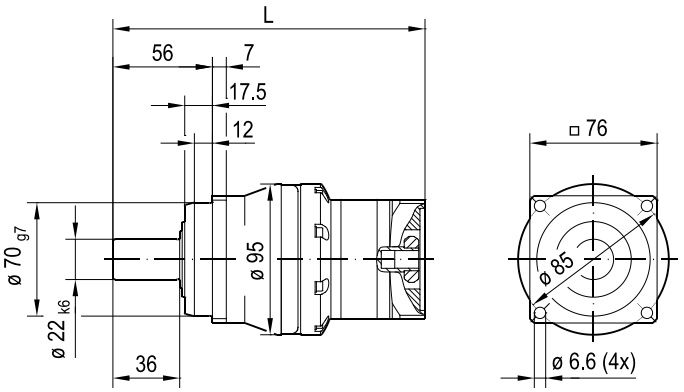

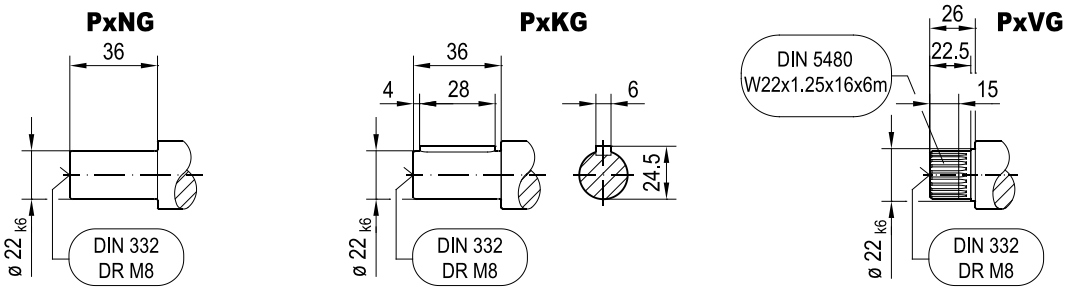

min. □ 55 Fig. A

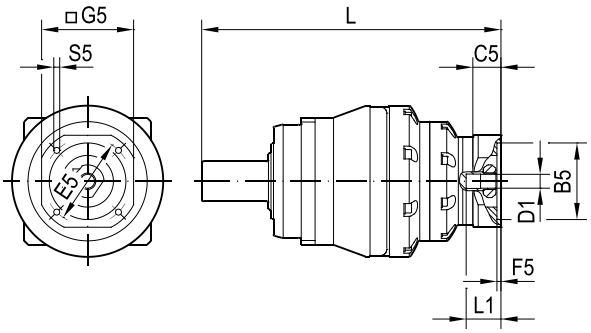

min. □ 73 Fig. B

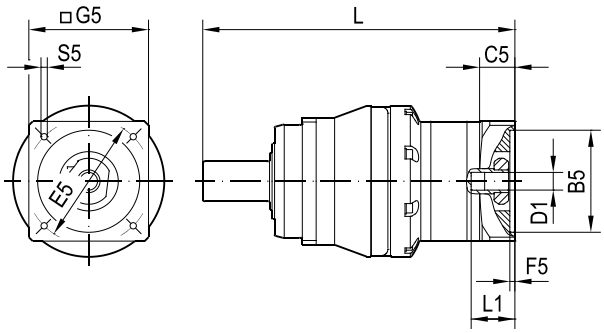

(→)	D1	L1	B5	E5	G5	L	C5	F5	S5	Fig.
H.01.03	11	37.6	40	63	55	211	19.7	3.5	M4x12	A
H.02.04	11	37.6	60	75	62	211	19.7	3.5	M5x12	A
H.02.05	11	37.6	60	75	73	211	19.7	3.5	M5x12	A
H.03.03	11	37.6	60	90	73	211	19.7	3.5	M5x12	A
H.04.02	14	37.4	50	95	95	214	25.2	3.5	M6x15	B
H.05.02	14	37.4	60	75	73	214	25.2	3.5	M6x15	B
H.06.02	14	37.4	80	100	95	214	25.2	4	M6x15	B
H.06.05	14	37.4	80	100	88	214	25.2	4	M6x15	B
H.07.01	14	37.4	60	75	73	214	25.2	3.5	M5x12	B
H.32.01	14	37.4	60	82	73	214	25.2	3.5	M5x12	B

27781410/EN – 03/2022

			P5NG41				
Gear ratio			**3**	**4**	**5**	**7**	**10**
Short-time duty							
Peak torque	M_{a_pk}	Nm	295	395	395	375	270
Peak motor speed	n_{e_pk}	min^{-1}	5400	5500	5500	5500	5500
Peak radial force	$F_{R_a_pk}$	N	6930	6930	6930	6930	6930
Peak axial force	$F_{A_a_pk}$	N	5930	5930	5930	5930	5930
Peak breakdown torque	$M_{K_a_pk}$	Nm	485	485	485	485	485
Continuous duty							
Nominal torque	M_{a_N}	Nm	137	179	177	174	182
Nominal motor speed	n_{e_N}	min^{-1}	2500	2500	2500	2800	2800
Nominal radial force	$F_{R_a_N}$	N	5150	5620	5890	5890	5890
Nominal axial force	$F_{A_a_N}$	N	5040	5040	5040	5040	5040
Nominal breakdown torque	$M_{K_a_N}$	Nm	410	410	410	410	410
General technical data							
Torsional rigidity	c_{tr}	Nm/ arcmin	34	34	32	29	26
Rotational clearance	φ	arcmin	≤ 1 (R) – 3 (N)				
Pull-out rigidity	c_{pr}	Nm/ arcmin	141				
Service life	L	h	> 20000				
Cyclic duration factor	ED	%	≤ 60				
Gear unit temperature	T_{max}	°C	90				
Ambient temperature	T_{amb}	°C	-15 – +40				
Nominal ambient temperature	T_{amb_N}	°C	20				
Efficiency	η	%	97	97	97	97	97
Sound pressure level	L_P	dB (A)	≤ 58	≤ 58	≤ 58	≤ 58	≤ 58
Degree of protection	–	–	IP65				
No-load speed	M_{e_0}	Nm	3.10	2.40	2.10	1.30	1.00
Emergency stop torque	M_{a_es}	Nm	525	655	655	655	570
Mass moment of inertia incl. adapter							
Coupling Ø 19 mm	J	10^{-4} kgm^2	2.60	1.60	1.20	0.82	0.62
Coupling Ø 24 mm	J	10^{-4} kgm^2	3.87	2.87	2.47	2.09	1.89
Coupling Ø 28 mm	J	10^{-4} kgm^2	4.42	3.42	3.02	2.64	2.45
Coupling Ø 32 mm	J	10^{-4} kgm^2	6.69	5.70	5.30	4.93	4.73
Coupling Ø 38 mm	J	10^{-4} kgm^2	9.62	8.62	8.22	7.86	7.66
Mass incl. adapter							
Coupling Ø min – max	m	kg	7.33 – 14.68				

27781410/EN – 03/2022

P5NG41..

57 003 00 19

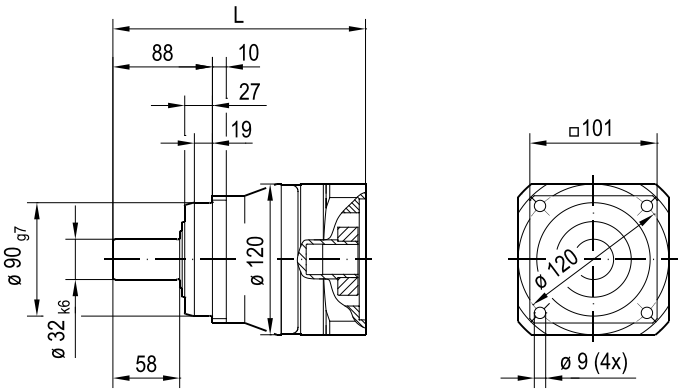

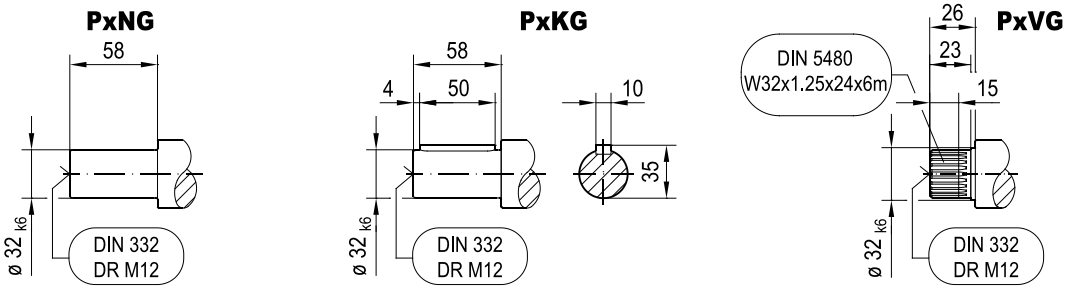

min. □ 120 Fig. B

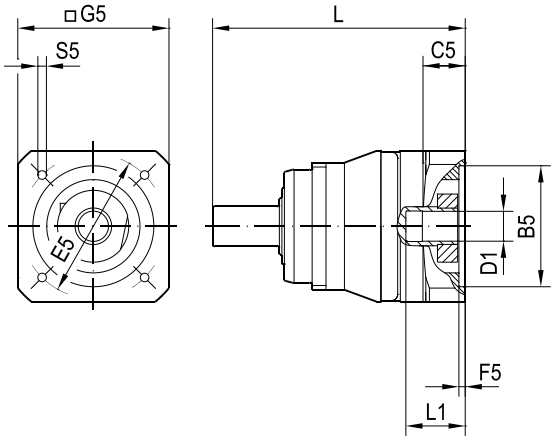

min. □ 152 Fig. C

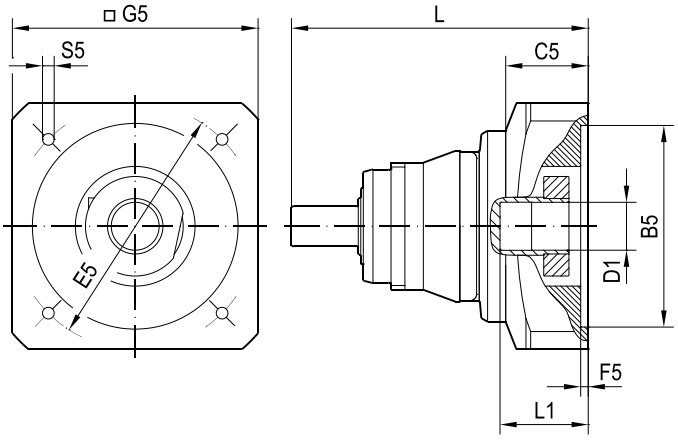

(→ ■ -)	D1	L1	B5	E5	G5	L	C5	F5	S5	Fig.
H.08.02	19	41	80	100	120	204	27	4	M6x15	B
H.09.02	19	42	95	115	120	205	28	4	M8x18	B
H.10.02	19	42	95	130	120	205	28	4	M8x18	B
H.11.02	19	42	110	130	120	205	28	4	M8x18	B
H.12.01	24	50	95	115	120	220	33.5	5	M8x18	B
H.13.01	24	50	95	130	120	220	33.5	5	M8x18	B
H.14.01	24	50	110	130	120	220	33.5	5	M8x18	B
H.15.01	24	51	110	165	143	221	35	5	M10x24	B
H.16.01	24	51	130	165	143	221	35	5	M10x24	B
H.16.03	24	51	130	165	140	221	35	5	M10x24	B
H.17.01	24	52	180	215	192	222	36	5	M10x24	B
H.18.01	28	60	130	165	143	228	45.5	5	M10x24	B
H.18.02	28	60	130	165	138	228	45.5	5	M10x24	B
H.19.01	28	60	180	215	192	228	45.5	5	M12x28	B
H.19.02	28	60	180	215	215	228	45.5	5	M12x28	B
H.20.01	32	65	130	165	152	232	43	5	M10x24	C
H.21.01	32	65	130	215	192	232	43	5	M12x28	C
H.22.01	32	62	155	190	163	229	40	5	M10x24	C
H.23.01	32	65	180	215	190	232	43	5	M12x28	C
H.23.02	32	65	180	215	215	232	43	5	M12x28	C
H.24.01	38	80	114.3	200	180	248	58.5	5	M12x28	C
H.25.01	38	80	180	215	192	248	58.5	5	M12x28	C
H.25.02	38	80	180	215	215	248	58.5	5	M12x28	C
H.25.04	38	80	180	215	190	248	58.5	5	M12x28	C
H.26.01	38	80	230	265	240	248	58.5	5	M12x28	C

27781410/EN – 03/2022

			P5NG42										
Gear ratio			**12**	**16**	**20**	**25**	**28**	**30**	**35**	**40**	**50**	**70**	**100**
Short-time duty													
Peak torque	M_{a_pk}	Nm	375	360	360	360	360	375	360	360	360	360	260
Peak motor speed	n_{e_pk}	min^{-1}	6500	6500	6500	6500	6500	6500	6500	6500	6500	6500	6500
Peak radial force	$F_{R_a_pk}$	N	6930	6930	6930	6930	6930	6930	6930	6930	6930	6930	6930
Peak axial force	$F_{A_a_pk}$	N	5930	5930	5930	5930	5930	5930	5930	5930	5930	5930	5930
Peak breakdown torque	$M_{K_a_pk}$	Nm	485	485	485	485	485	485	485	485	485	485	485
Continuous duty													
Nominal torque	M_{a_N}	Nm	187	255	270	265	290	187	290	290	290	290	215
Nominal motor speed	n_{e_N}	min^{-1}	3100	3100	3100	3100	3100	3100	3100	3100	3500	4200	4200
Nominal radial force	$F_{R_a_N}$	N	5890	5890	5890	5890	5890	5890	5890	5890	5890	5890	5890
Nominal axial force	$F_{A_a_N}$	N	5040	5040	5040	5040	5040	5040	5040	5040	5040	5040	5040
Nominal breakdown torque	$M_{K_a_N}$	Nm	410	410	410	410	410	410	410	410	410	410	410
General technical data													
Torsional rigidity	c_{tr}	Nm/ arcmin	34	34	34	33	33	31	32	32	32	30	27
Rotational clearance	φ	arcmin	≤ 3 (R) – 5 (N)										
Pull-out rigidity	c_{pr}	Nm/ arcmin	141										
Service life	L	h	> 20000										
Cyclic duration factor	ED	%	≤ 60										
Gear unit temperature	T_{max}	°C	90										
Ambient temperature	T_{amb}	°C	-15 – +40										
Nominal ambient temperature	T_{amb_N}	°C	20										
Efficiency	η	%	97	94	94	94	94	94	94	94	94	94	94
Sound pressure level	L_P	dB (A)	≤ 58	≤ 56	≤ 56	≤ 56	≤ 56	≤ 56	≤ 56	≤ 56	≤ 56	≤ 56	≤ 56
Degree of protection	–	–	IP65										
No-load speed	M_{e_0}	Nm	1.00	1.00	0.93	0.85	0.77	0.77	0.54	0.54	0.46	0.39	0.37
Emergency stop torque	M_{a_es}	Nm	685	655	655	655	655	685	655	655	655	655	575
Mass moment of inertia incl. adapter													
Coupling Ø 14 mm	J	10^{-4} kgm^2	0.62	0.56	0.43	0.42	0.32	0.27	0.31	0.26	0.26	0.25	0.25
Coupling Ø 19 mm	J	10^{-4} kgm^2	0.85	0.78	0.66	0.64	0.55	0.50	0.54	0.49	0.48	0.48	0.48
Coupling Ø 24 mm	J	10^{-4} kgm^2	2.11	2.05	1.93	1.91	1.82	1.77	1.81	1.76	1.75	1.75	1.75
Coupling Ø 28 mm	J	10^{-4} kgm^2	2.67	2.61	2.48	2.47	2.37	2.32	2.36	2.31	2.31	2.31	2.30
Mass incl. adapter													
Coupling Ø min – max	m	kg	8.00 – 12.82										

27781410/EN – 03/2022

P5NG42..

57 004 00 19

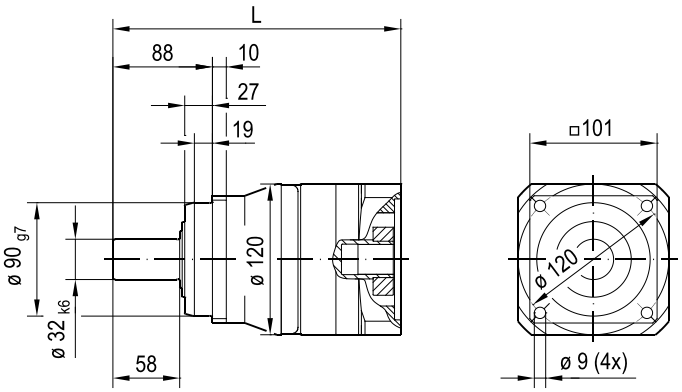

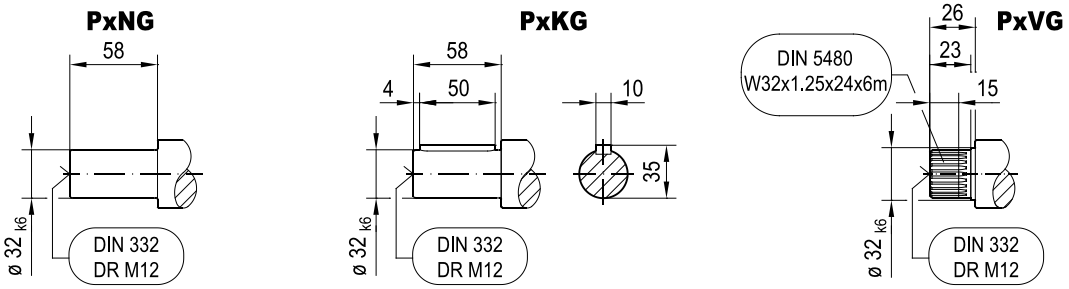

min. □ 95 **Fig. A**

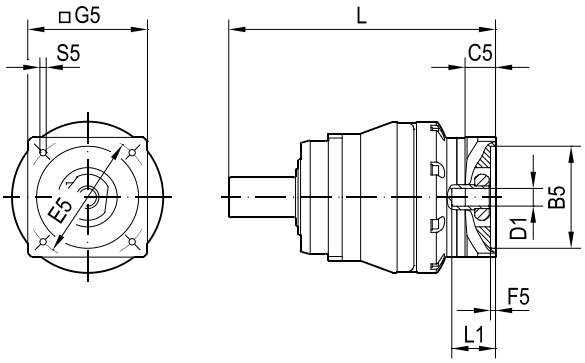

min. □ 120 **Fig. B**

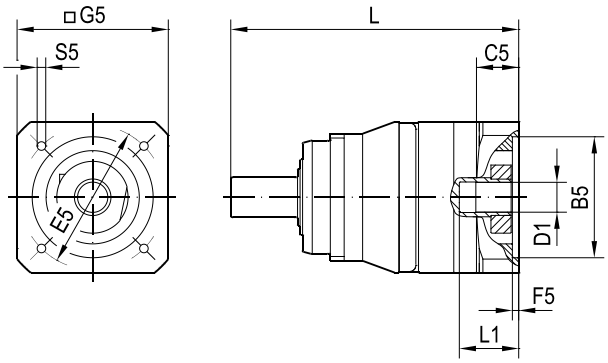

(→ ■ -)	D1	L1	B5	E5	G5	L	C5	F5	S5	Fig.
H.04.03	14	37.4	50	95	95	231	24.2	3.5	M6x15	A
H.05.03	14	37.4	60	75	95	231	24.2	3.5	M6x15	A
H.06.03	14	37.4	80	100	95	231	24.2	4	M6x15	A
H.07.02	14	37.4	60	75	95	231	24.2	3.5	M5x12	A
H.08.01	19	42	80	100	95	238	28	4	M6x15	A
H.08.02	19	41	80	100	120	237	27	4	M6x15	B
H.09.01	19	42	95	115	105	238	28	4	M8x18	A
H.09.02	19	42	95	115	120	238	28	4	M8x18	B
H.10.02	19	42	95	130	120	238	28	4	M8x18	B
H.11.02	19	42	110	130	120	238	28	4	M8x18	B
H.12.01	24	50	95	115	120	253	33.5	5	M8x18	B
H.13.01	24	50	95	130	120	253	33.5	5	M8x18	B
H.14.01	24	50	110	130	120	253	33.5	5	M8x18	B
H.15.01	24	51	110	165	143	254	35	5	M10x24	B
H.16.01	24	51	130	165	143	254	35	5	M10x24	B
H.16.03	24	51	130	165	140	254	35	5	M10x24	B
H.17.01	24	52	180	215	192	255	36	5	M10x24	B
H.18.01	28	60	130	165	143	261	45.5	5	M10x24	B
H.18.02	28	60	130	165	138	261	45.5	5	M10x24	B
H.19.01	28	60	180	215	192	261	45.5	5	M12x28	B
H.19.02	28	60	180	215	215	261	45.5	5	M12x28	B
H.32.02	14	37.4	60	82	95	231	24.2	3.5	M5x12	A

27781410/EN – 03/2022

			P5NG43							
Gear ratio			**64**	**80**	**112**	**125**	**140**	**160**	**175**	**196**
Short-time duty										
Peak torque	M_{a_pk}	Nm	360	360	360	360	360	360	360	360
Peak motor speed	n_{e_pk}	min^{-1}	6500	6500	6500	6500	6500	6500	6500	6500
Peak radial force	$F_{R_a_pk}$	N	6930	6930	6930	6930	6930	6930	6930	6930
Peak axial force	$F_{A_a_pk}$	N	5930	5930	5930	5930	5930	5930	5930	5930
Peak breakdown torque	$M_{K_a_pk}$	Nm	485	485	485	485	485	485	485	485
Continuous duty										
Nominal torque	M_{a_N}	Nm	255	255	255	265	270	255	265	290
Nominal motor speed	n_{e_N}	min^{-1}	3100	3100	3100	3100	3100	3100	3100	3100
Nominal radial force	$F_{R_a_N}$	N	5890	5890	5890	5890	5890	5890	5890	5890
Nominal axial force	$F_{A_a_N}$	N	5040	5040	5040	5040	5040	5040	5040	5040
Nominal breakdown torque	$M_{K_a_N}$	Nm	410	410	410	410	410	410	410	410
General technical data										
Torsional rigidity	c_{tr}	Nm/ arcmin	33	33	33	31	33	33	32	32
Rotational clearance	φ	arcmin	≤ 3 (R) – 5 (N)							
Pull-out rigidity	c_{pr}	Nm/ arcmin	141							
Service life	L	h	> 20000							
Cyclic duration factor	ED	%	≤ 60							
Gear unit temperature	T_{max}	°C	90							
Ambient temperature	T_{amb}	°C	-15 – +40							
Nominal ambient temperature	T_{amb_N}	°C	20							
Efficiency	η	%	92	92	92	92	92	92	92	92
Sound pressure level	L_P	dB (A)	≤ 56	≤ 56	≤ 56	≤ 56	≤ 56	≤ 56	≤ 56	≤ 56
Degree of protection	–	–	IP65							
No-load speed	M_{e_0}	Nm	0.52	0.45	0.37	0.35	0.32	0.30	0.28	0.27
Emergency stop torque	M_{a_es}	Nm	655	655	655	655	655	655	655	655
Mass moment of inertia incl. adapter										
Coupling Ø 11 mm	J	10^{-4} kgm^2	0.15	0.12	0.09	0.11	0.09	0.08	0.09	0.09
Coupling Ø 14 mm	J	10^{-4} kgm^2	0.29	0.26	0.23	0.26	0.23	0.22	0.23	0.23
Coupling Ø 19 mm	J	10^{-4} kgm^2	0.52	0.49	0.46	0.48	0.46	0.45	0.46	0.46
Mass incl. adapter										
Coupling Ø min – max	m	kg	8.36 – 9.38							

27781410/EN – 03/2022

P5NG43..

57 068 00 19

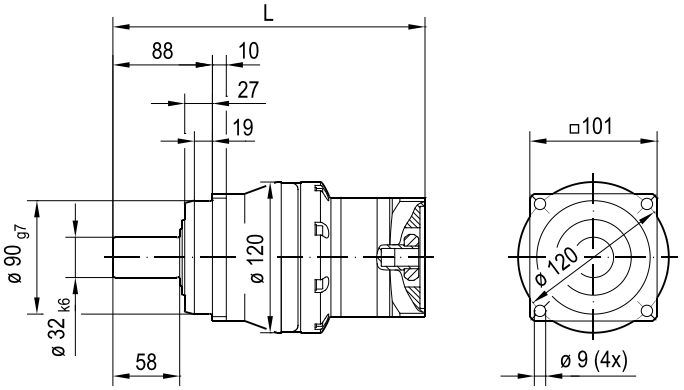

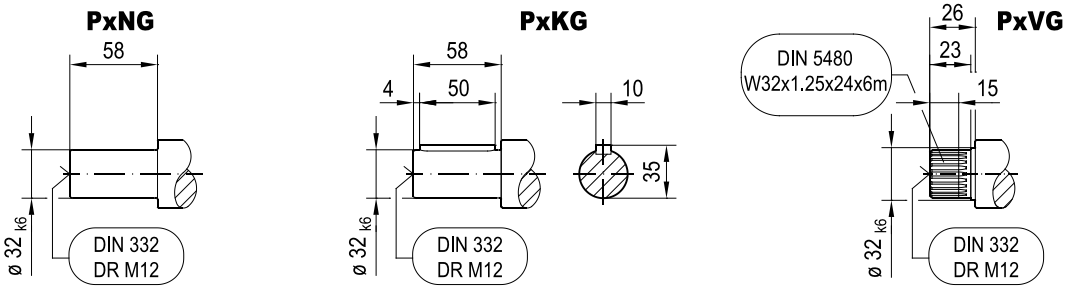

min. □ 73 **Fig. A**

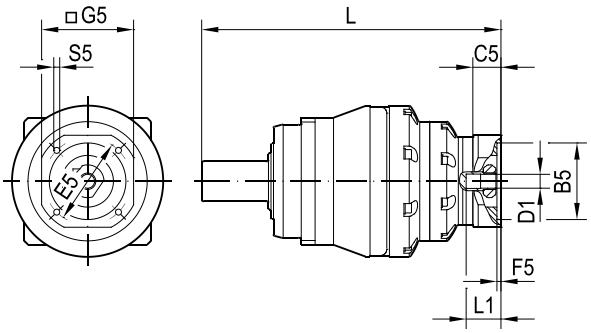

min. □ 95 **Fig. B**

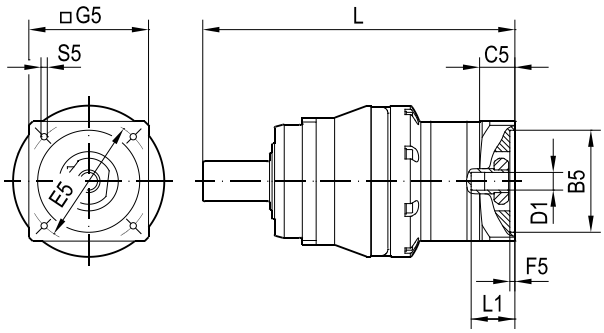

(→)	D1	L1	B5	E5	G5	L	C5	F5	S5	Fig.
H.01.02	11	37.6	40	63	73	257	22.3	0	M4x12	A
H.02.03	11	37.6	60	75	73	257	22.3	3.5	M5x12	A
H.03.02	11	37.6	60	90	73	257	22.3	3.5	M5x12	A
H.04.02	14	37.4	50	95	95	260	25.2	3.5	M6x15	A
H.04.03	14	37.4	50	95	95	260	24.2	3.5	M6x15	B
H.05.02	14	37.4	60	75	73	260	25.2	3.5	M6x15	A
H.05.03	14	37.4	60	75	95	260	24.2	3.5	M6x15	B
H.06.03	14	37.4	80	100	95	260	24.2	4	M6x15	B
H.06.05	14	37.4	80	100	88	260	25.2	4	M6x15	A
H.07.01	14	37.4	60	75	73	260	25.2	3.5	M5x12	A
H.07.02	14	37.4	60	75	95	260	24.2	3.5	M5x12	B
H.08.01	19	42	80	100	95	267	28	4	M6x15	B
H.09.01	19	42	95	115	105	267	28	4	M8x18	B
H.10.01	19	42	95	130	120	267	28	4	M8x18	B
H.11.01	19	42	110	130	120	267	28	4	M8x18	B
H.32.01	14	37.4	60	82	73	260	25.2	3.5	M5x12	A
H.32.02	14	37.4	60	82	95	260	24.2	3.5	M5x12	B

27781410/EN – 03/2022

			P5NG43							
Gear ratio			**200**	**245**	**250**	**280**	**350**	**400**	**500**	**700**
Short-time duty										
Peak torque	M_{a_pk}	Nm	360	360	360	360	360	360	360	360
Peak motor speed	n_{e_pk}	min^{-1}	6500	6500	6500	6500	6500	6500	6500	6500
Peak radial force	$F_{R_a_pk}$	N	6930	6930	6930	6930	6930	6930	6930	6930
Peak axial force	$F_{A_a_pk}$	N	5930	5930	5930	5930	5930	5930	5930	5930
Peak breakdown torque	$M_{K_a_pk}$	Nm	485	485	485	485	485	485	485	485
Continuous duty										
Nominal torque	M_{a_N}	Nm	270	290	265	290	290	290	290	290
Nominal motor speed	n_{e_N}	min^{-1}	3100	3100	3100	3100	3100	3100	3500	4200
Nominal radial force	$F_{R_a_N}$	N	5890	5890	5890	5890	5890	5890	5890	5890
Nominal axial force	$F_{A_a_N}$	N	5040	5040	5040	5040	5040	5040	5040	5040
Nominal breakdown torque	$M_{K_a_N}$	Nm	410	410	410	410	410	410	410	410
General technical data										
Torsional rigidity	c_{tr}	Nm/ arcmin	33	31	32	32	31	32	31	29
Rotational clearance	φ	arcmin	≤ 3 (R) – 5 (N)							
Pull-out rigidity	c_{pr}	Nm/ arcmin	141							
Service life	L	h	> 20000							
Cyclic duration factor	ED	%	≤ 60							
Gear unit temperature	T_{max}	°C	90							
Ambient temperature	T_{amb}	°C	-15 – +40							
Nominal ambient temperature	T_{amb_N}	°C	20							
Efficiency	η	%	92	92	92	92	92	92	92	92
Sound pressure level	L_P	dB (A)	≤ 56	≤ 56	≤ 56	≤ 56	≤ 56	≤ 56	≤ 56	≤ 56
Degree of protection	–	–	IP65							
No-load speed	M_{e_0}	Nm	0.26	0.23	0.23	0.22	0.19	0.17	0.15	0.13
Emergency stop torque	M_{a_es}	Nm	655	655	655	655	655	655	655	655
Mass moment of inertia incl. adapter										
Coupling Ø 11 mm	J	10^{-4} kgm^2	0.07	0.09	0.07	0.07	0.07	0.07	0.07	0.07
Coupling Ø 14 mm	J	10^{-4} kgm^2	0.22	0.23	0.22	0.22	0.22	0.21	0.21	0.21
Coupling Ø 19 mm	J	10^{-4} kgm^2	0.44	0.46	0.44	0.44	0.44	0.44	0.44	0.44
Mass incl. adapter										
Coupling Ø min – max	m	kg	8.36 – 9.38							

27781410/EN – 03/2022

P5NG43..

57 068 00 19

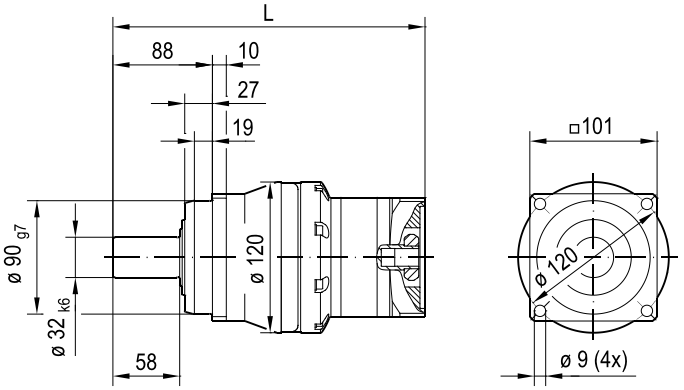

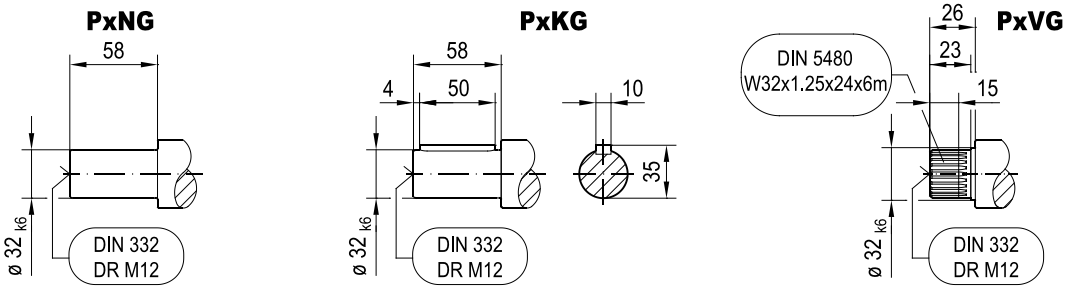

min. □ 73 **Fig. A**

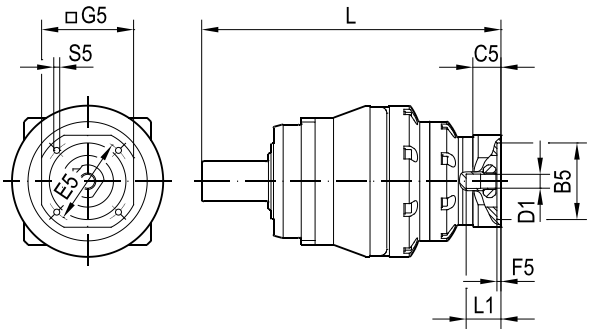

min. □ 95 **Fig. B**

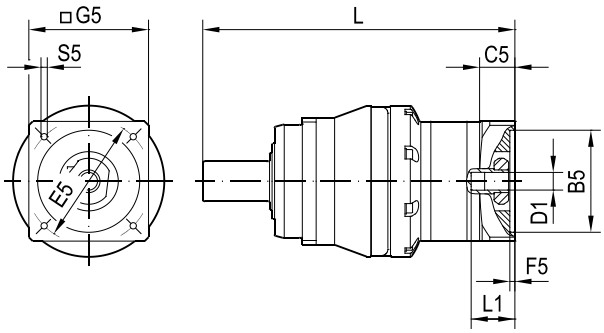

(→ ■ -)	D1	L1	B5	E5	G5	L	C5	F5	S5	Fig.
H.01.02	11	37.6	40	63	73	257	22.3	0	M4x12	A
H.02.03	11	37.6	60	75	73	257	22.3	3.5	M5x12	A
H.03.02	11	37.6	60	90	73	257	22.3	3.5	M5x12	A
H.04.02	14	37.4	50	95	95	260	25.2	3.5	M6x15	A
H.04.03	14	37.4	50	95	95	260	24.2	3.5	M6x15	B
H.05.02	14	37.4	60	75	73	260	25.2	3.5	M6x15	A
H.05.03	14	37.4	60	75	95	260	24.2	3.5	M6x15	B
H.06.03	14	37.4	80	100	95	260	24.2	4	M6x15	B
H.06.05	14	37.4	80	100	88	260	25.2	4	M6x15	A
H.07.01	14	37.4	60	75	73	260	25.2	3.5	M5x12	A
H.07.02	14	37.4	60	75	95	260	24.2	3.5	M5x12	B
H.08.01	19	42	80	100	95	267	28	4	M6x15	B
H.09.01	19	42	95	115	105	267	28	4	M8x18	B
H.10.01	19	42	95	130	120	267	28	4	M8x18	B
H.11.01	19	42	110	130	120	267	28	4	M8x18	B
H.32.01	14	37.4	60	82	73	260	25.2	3.5	M5x12	A
H.32.02	14	37.4	60	82	95	260	24.2	3.5	M5x12	B

27781410/EN – 03/2022

			P5NG51				
Gear ratio			**3**	**4**	**5**	**7**	**10**
Short-time duty							
Peak torque	M_{a_pk}	Nm	490	830	830	720	555
Peak motor speed	n_{e_pk}	min^{-1}	5000	5000	5000	5000	5000
Peak radial force	$F_{R_a_pk}$	N	10300	10300	10300	10300	10300
Peak axial force	$F_{A_a_pk}$	N	10300	10300	10300	10300	10300
Peak breakdown torque	$M_{K_a_pk}$	Nm	950	950	950	950	950
Continuous duty							
Nominal torque	M_{a_N}	Nm	210	350	345	330	340
Nominal motor speed	n_{e_N}	min^{-1}	2100	2100	2100	2600	2600
Nominal radial force	$F_{R_a_N}$	N	7530	8210	8780	8830	8830
Nominal axial force	$F_{A_a_N}$	N	8800	8800	8800	8800	8800
Nominal breakdown torque	$M_{K_a_N}$	Nm	800	800	800	800	800
General technical data							
Torsional rigidity	c_{tr}	Nm/ arcmin	68	69	67	59	52
Rotational clearance	φ	arcmin	≤ 1 (R) – 3 (N)				
Pull-out rigidity	c_{pr}	Nm/ arcmin	298				
Service life	L	h	> 20000				
Cyclic duration factor	ED	%	≤ 60				
Gear unit temperature	T_{max}	°C	90				
Ambient temperature	T_{amb}	°C	-15 – +40				
Nominal ambient temperature	T_{amb_N}	°C	20				
Efficiency	η	%	97	97	97	97	97
Sound pressure level	L_P	dB (A)	≤ 59	≤ 59	≤ 59	≤ 59	≤ 59
Degree of protection	–	–	IP65				
No-load speed	M_{e_0}	Nm	6.70	5.40	4.40	2.80	2.20
Emergency stop torque	M_{a_es}	Nm	1310	1410	1410	1410	1140
Mass moment of inertia incl. adapter							
Coupling Ø 24 mm	J	10^{-4} kgm^2	9.01	5.78	4.44	3.02	2.34
Coupling Ø 32 mm	J	10^{-4} kgm^2	11.69	9.94	7.11	5.84	5.19
Coupling Ø 38 mm	J	10^{-4} kgm^2	14.61	11.37	10.03	8.77	8.11
Coupling Ø 48 mm	J	10^{-4} kgm^2	28.54	25.30	23.96	22.74	22.09
Mass incl. adapter							
Coupling Ø min – max	m	kg	16.08 – 27.50				

27781410/EN – 03/2022

P5NG51..

57 005 00 19

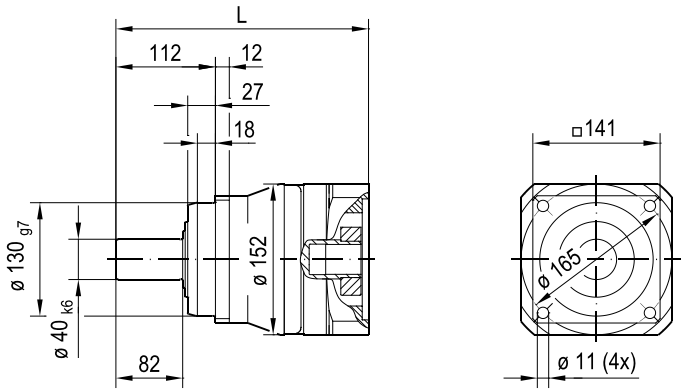

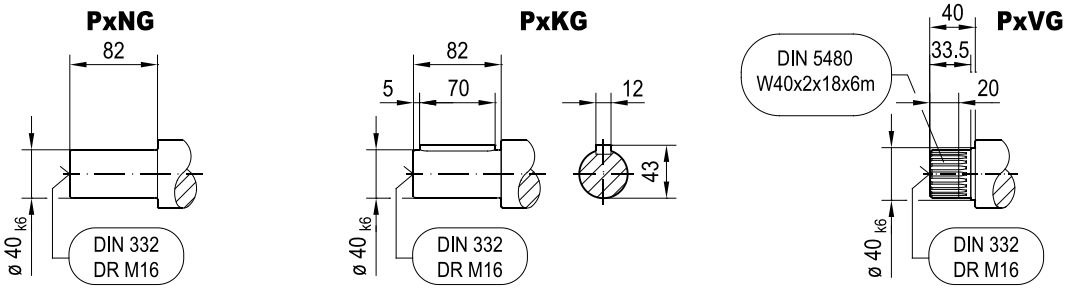

min. □ 152 Fig. B

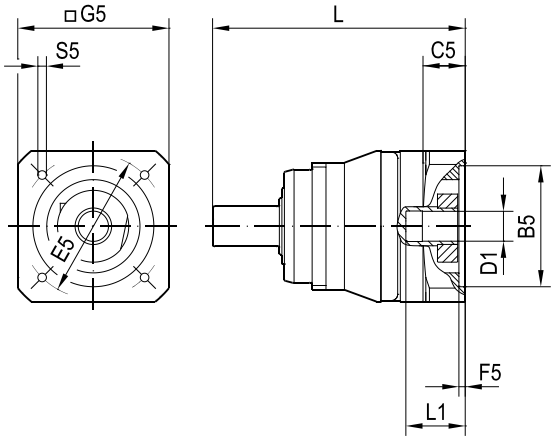

min. □ 215 Fig. C

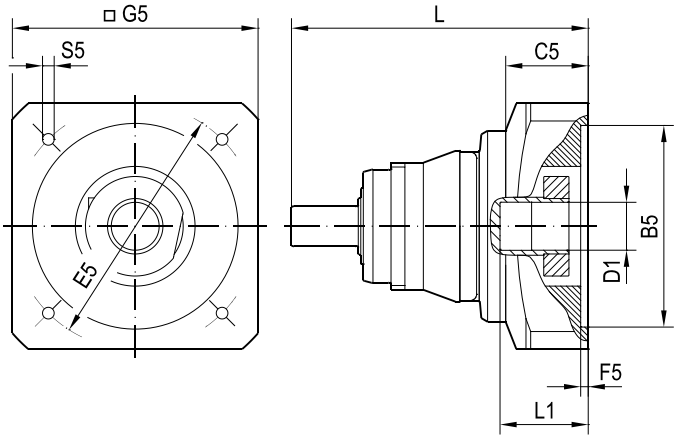

(→ ■ -)	D1	L1	B5	E5	G5	L	C5	F5	S5	Fig.
H.12.02	24	50	95	115	152	258	34.5	5	M8x18	B
H.13.02	24	50	95	130	152	258	34.5	5	M8x18	B
H.14.02	24	50	110	130	152	258	34.5	5	M8x18	B
H.15.02	24	50	110	165	152	259	35	5	M10x24	B
H.16.02	24	50	130	165	152	259	35	5	M10x24	B
H.17.02	24	50	180	215	192	259	35	5	M10x24	B
H.20.01	32	65	130	165	152	271	43	5	M10x24	B
H.21.01	32	65	130	215	192	271	43	5	M12x28	B
H.22.01	32	62	155	190	163	268	40	5	M10x24	B
H.23.01	32	65	180	215	190	271	43	5	M12x28	B
H.23.02	32	65	180	215	215	271	43	5	M12x28	B
H.24.01	38	80	114.3	200	180	286	58.5	5	M12x28	B
H.25.01	38	80	180	215	192	286	58.5	5	M12x28	B
H.25.02	38	80	180	215	215	286	58.5	5	M12x28	B
H.25.04	38	80	180	215	190	286	58.5	5	M12x28	B
H.26.01	38	80	230	265	240	286	58.5	5	M12x28	B
H.27.01	48	85	180	215	215	298	54.5	7	M12x28	C
H.28.01	48	110	230	265	240	323	79.5	7	M12x28	C
H.30.01	48	82	250	300	262	295	51.5	7	M16x36	C

27781410/EN – 03/2022

			P5NG52										
Gear ratio			**12**	**16**	**20**	**25**	**28**	**30**	**35**	**40**	**50**	**70**	**100**
Short-time duty													
Peak torque	M_{a_pk}	Nm	510	760	760	700	760	510	700	760	700	725	530
Peak motor speed	n_{e_pk}	min^{-1}	6000	6000	6000	6000	6000	6000	6000	6000	6000	6000	6000
Peak radial force	$F_{R_a_pk}$	N	10300	10300	10300	10300	10300	10300	10300	10300	10300	10300	10300
Peak axial force	$F_{A_a_pk}$	N	10300	10300	10300	10300	10300	10300	10300	10300	10300	10300	10300
Peak breakdown torque	$M_{K_a_pk}$	Nm	950	950	950	950	950	950	950	950	950	950	950
Continuous duty													
Nominal torque	M_{a_N}	Nm	285	480	515	510	570	285	560	610	560	610	450
Nominal motor speed	n_{e_N}	min^{-1}	2900	2900	2900	2900	2900	2900	2900	2900	3200	3200	3900
Nominal radial force	$F_{R_a_N}$	N	8830	8830	8830	8830	8830	8830	8830	8830	8830	8830	8830
Nominal axial force	$F_{A_a_N}$	N	8800	8800	8800	8800	8800	8800	8800	8800	8800	8800	8800
Nominal breakdown torque	$M_{K_a_N}$	Nm	800	800	800	800	800	800	800	800	800	800	800
General technical data													
Torsional rigidity	c_{tr}	Nm/ arcmin	69	70	69	68	68	65	67	67	67	61	54
Rotational clearance	φ	arcmin	≤ 3 (R) – 5 (N)										
Pull-out rigidity	c_{pr}	Nm/ arcmin	298										
Service life	L	h	> 20000										
Cyclic duration factor	ED	%	≤ 60										
Gear unit temperature	T_{max}	°C	90										
Ambient temperature	T_{amb}	°C	-15 – +40										
Nominal ambient temperature	T_{amb_N}	°C	20										
Efficiency	η	%	97	94	94	94	94	94	94	94	94	94	94
Sound pressure level	L_P	dB (A)	≤ 59	≤ 59	≤ 59	≤ 59	≤ 59	≤ 59	≤ 59	≤ 59	≤ 59	≤ 59	≤ 59
Degree of protection	–	–	IP65										
No-load speed	M_{e_0}	Nm	2.20	2.40	2.10	2.00	1.80	1.80	1.20	1.20	1.10	0.88	0.80
Emergency stop torque	M_{a_es}	Nm	1230	1410	1410	1410	1410	1230	1410	1410	1410	1410	1140
Mass moment of inertia incl. adapter													
Coupling Ø 19 mm	J	10^{-4} kgm^2	1.95	1.85	1.30	1.25	0.87	0.68	0.84	0.65	0.63	0.62	0.62
Coupling Ø 24 mm	J	10^{-4} kgm^2	3.22	3.02	2.57	2.51	2.14	1.95	2.11	1.92	1.90	1.89	1.88
Coupling Ø 28 mm	J	10^{-4} kgm^2	3.77	3.57	3.12	3.07	2.69	2.50	2.67	2.47	2.46	2.45	2.44
Coupling Ø 32 mm	J	10^{-4} kgm^2	6.05	5.84	5.39	5.34	4.98	4.79	4.95	4.76	4.75	4.73	4.73
Coupling Ø 38 mm	J	10^{-4} kgm^2	8.97	8.77	8.32	8.27	7.91	7.72	7.88	7.68	7.67	7.66	7.65
Mass incl. adapter													
Coupling Ø min – max	m	kg	16.51 – 24.23										

27781410/EN – 03/2022

P5NG52..

57 006 00 19

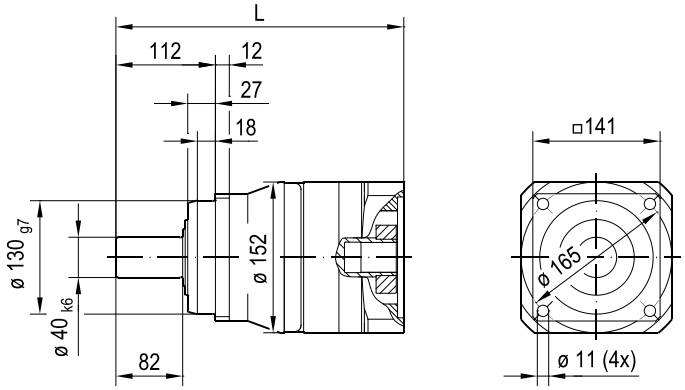

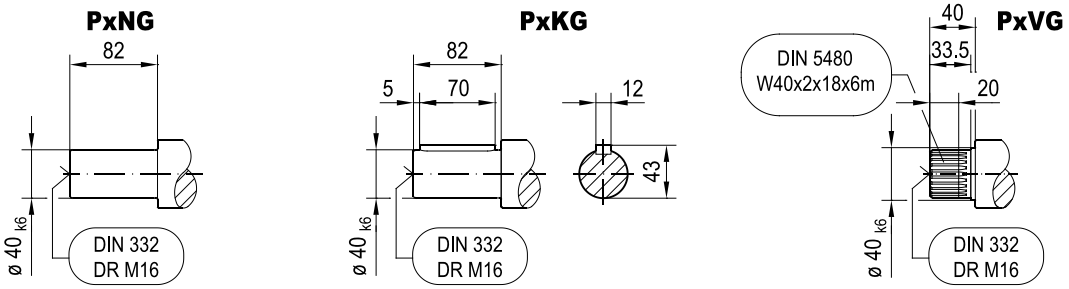

min. □ 120 Fig. A

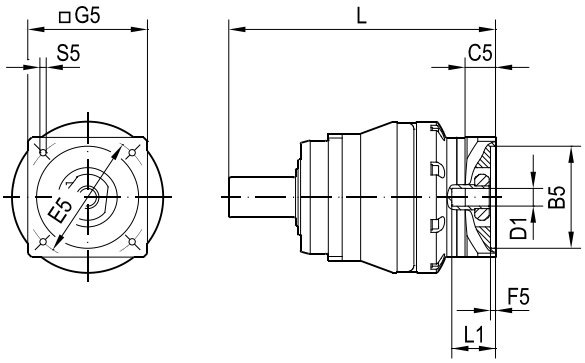

min. □ 152 Fig. B

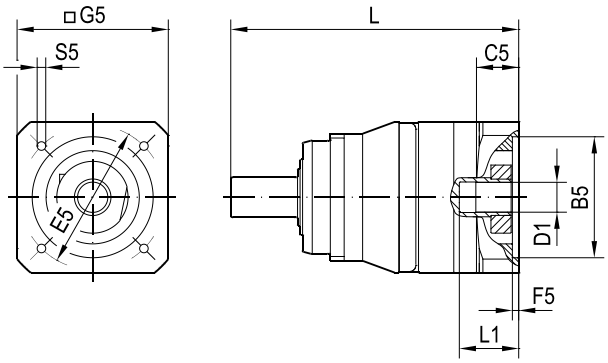

(→ ■ -)	D1	L1	B5	E5	G5	L	C5	F5	S5	Fig.
H.08.02	19	41	80	100	120	283	27	4	M6x15	A
H.09.02	19	42	95	115	120	284	28	4	M8x18	A
H.10.02	19	42	95	130	120	284	28	4	M8x18	A
H.11.02	19	42	110	130	120	284	28	4	M8x18	A
H.12.01	24	50	95	115	120	299	33.5	5	M8x18	A
H.12.02	24	50	95	115	152	299	34.5	5	M8x18	B
H.13.01	24	50	95	130	120	299	33.5	5	M8x18	A
H.13.02	24	50	95	130	152	299	34.5	5	M8x18	B
H.14.01	24	50	110	130	120	299	33.5	5	M8x18	A
H.14.02	24	50	110	130	152	299	34.5	5	M8x18	B
H.15.01	24	51	110	165	143	300	35	5	M10x24	A
H.15.02	24	50	110	165	152	299	35	5	M10x24	B
H.16.01	24	51	130	165	143	300	35	5	M10x24	A
H.16.02	24	50	130	165	152	299	35	5	M10x24	B
H.16.03	24	51	130	165	140	300	35	5	M10x24	A
H.17.02	24	50	180	215	192	299	35	5	M10x24	B
H.18.01	28	60	130	165	143	307	45.5	5	M10x24	A
H.18.02	28	60	130	165	138	307	45.5	5	M10x24	A
H.20.01	32	65	130	165	152	311	43	5	M10x24	B
H.21.01	32	65	130	215	192	311	43	5	M12x28	B
H.22.01	32	62	155	190	163	308	40	5	M10x24	B
H.23.01	32	65	180	215	190	311	43	5	M12x28	B
H.23.02	32	65	180	215	215	311	43	5	M12x28	B
H.24.01	38	80	114.3	200	180	327	58.5	5	M12x28	B
H.25.01	38	80	180	215	192	327	58.5	5	M12x28	B
H.25.02	38	80	180	215	215	327	58.5	5	M12x28	B
H.25.04	38	80	180	215	190	327	58.5	5	M12x28	B
H.26.01	38	80	230	265	240	327	58.5	5	M12x28	B

27781410/EN – 03/2022

			P5NG53							
Gear ratio			**64**	**80**	**112**	**125**	**140**	**160**	**175**	**196**
Short-time duty										
Peak torque	M_{a_pk}	Nm	760	760	760	700	760	760	700	760
Peak motor speed	n_{e_pk}	min^{-1}	6000	6000	6000	6000	6000	6000	6000	6000
Peak radial force	$F_{R_a_pk}$	N	10300	10300	10300	10300	10300	10300	10300	10300
Peak axial force	$F_{A_a_pk}$	N	10300	10300	10300	10300	10300	10300	10300	10300
Peak breakdown torque	$M_{K_a_pk}$	Nm	950	950	950	950	950	950	950	950
Continuous duty										
Nominal torque	M_{a_N}	Nm	480	480	480	510	515	480	510	570
Nominal motor speed	n_{e_N}	min^{-1}	2900	2900	2900	2900	2900	2900	2900	2900
Nominal radial force	$F_{R_a_N}$	N	8070	8060	8050	8830	8050	8050	8830	8050
Nominal axial force	$F_{A_a_N}$	N	8800	8800	8800	8800	8800	8800	8800	8800
Nominal breakdown torque	$M_{K_a_N}$	Nm	800	800	800	800	800	800	800	800
General technical data										
Torsional rigidity	c_{tr}	Nm/ arcmin	67	67	67	65	67	67	65	66
Rotational clearance	φ	arcmin	≤ 3 (R) – 5 (N)							
Pull-out rigidity	c_{pr}	Nm/ arcmin	298							
Service life	L	h	> 20000							
Cyclic duration factor	ED	%	≤ 60							
Gear unit temperature	T_{max}	°C	90							
Ambient temperature	T_{amb}	°C	-15 – +40							
Nominal ambient temperature	T_{amb_N}	°C	20							
Efficiency	η	%	92	92	92	92	92	92	92	92
Sound pressure level	L_P	dB (A)	≤ 57	≤ 57	≤ 57	≤ 57	≤ 57	≤ 57	≤ 57	≤ 57
Degree of protection	–	–	IP65							
No-load speed	M_{e_0}	Nm	1.20	1.00	0.85	0.80	0.75	0.69	0.66	0.62
Emergency stop torque	M_{a_es}	Nm	1410	1410	1410	1410	1410	1410	1410	1410
Mass moment of inertia incl. adapter										
Coupling Ø 14 mm	J	10^{-4} kgm^2	0.57	0.44	0.32	0.42	0.31	0.26	0.31	0.31
Coupling Ø 19 mm	J	10^{-4} kgm^2	0.79	0.67	0.55	0.65	0.54	0.49	0.54	0.53
Coupling Ø 24 mm	J	10^{-4} kgm^2	2.06	1.93	1.82	1.91	1.81	1.76	1.81	1.80
Coupling Ø 28 mm	J	10^{-4} kgm^2	2.61	2.49	2.38	2.47	2.37	2.31	2.37	2.36
Mass incl. adapter										
Coupling Ø min – max	m	kg	17.22 – 22.07							

27781410/EN – 03/2022

P5NG53..

57 069 00 19

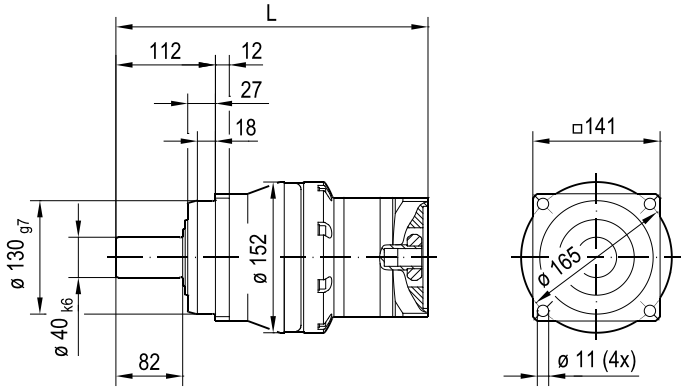

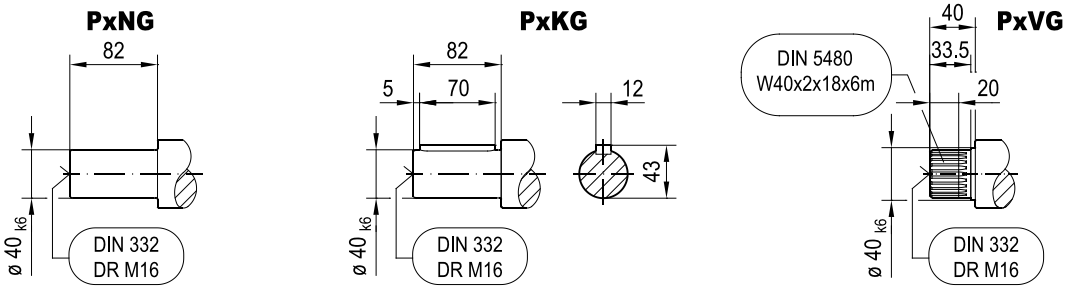

min. □ 95 Fig. A

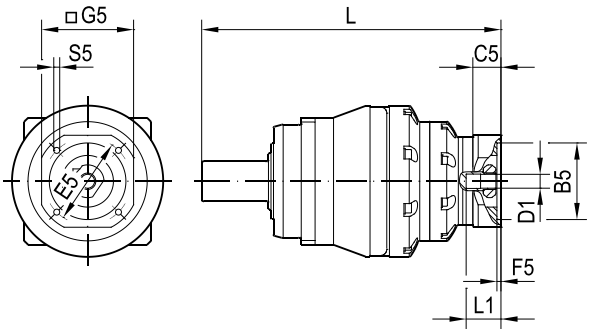

min. □ 120 Fig. B

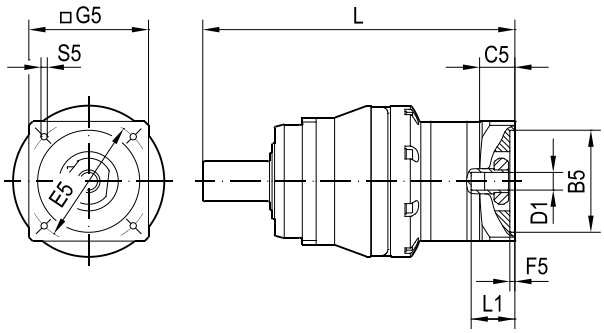

(→ ■ -)	D1	L1	B5	E5	G5	L	C5	F5	S5	Fig.
H.04.03	14	37.4	50	95	95	310	24.2	3.5	M6x15	A
H.05.03	14	37.4	60	75	95	310	24.2	3.5	M6x15	A
H.06.03	14	37.4	80	100	95	310	24.2	4	M6x15	A
H.07.02	14	37.4	60	75	95	310	24.2	3.5	M5x12	A
H.08.01	19	42	80	100	95	317	28	4	M6x15	A
H.08.02	19	41	80	100	120	316	27	4	M6x15	B
H.09.01	19	42	95	115	105	317	28	4	M8x18	A
H.09.02	19	42	95	115	120	317	28	4	M8x18	B
H.10.02	19	42	95	130	120	317	28	4	M8x18	B
H.11.02	19	42	110	130	120	317	28	4	M8x18	B
H.12.01	24	50	95	115	120	332	33.5	5	M8x18	B
H.13.01	24	50	95	130	120	332	33.5	5	M8x18	B
H.14.01	24	50	110	130	120	332	33.5	5	M8x18	B
H.15.01	24	51	110	165	143	333	35	5	M10x24	B
H.16.01	24	51	130	165	143	333	35	5	M10x24	B
H.16.03	24	51	130	165	140	333	35	5	M10x24	B
H.17.01	24	52	180	215	192	334	36	5	M10x24	B
H.18.01	28	60	130	165	143	340	45.5	5	M10x24	B
H.18.02	28	60	130	165	138	340	45.5	5	M10x24	B
H.19.01	28	60	180	215	192	340	45.5	5	M12x28	B
H.19.02	28	60	180	215	215	340	45.5	5	M12x28	B
H.32.02	14	37.4	60	82	95	310	24.2	3.5	M5x12	A

27781410/EN – 03/2022

			P5NG53							
Gear ratio			**200**	**245**	**250**	**280**	**350**	**400**	**500**	**700**
Short-time duty										
Peak torque	M_{a_pk}	Nm	760	700	700	760	700	760	700	725
Peak motor speed	n_{e_pk}	min^{-1}	6000	6000	6000	6000	6000	6000	6000	6000
Peak radial force	$F_{R_a_pk}$	N	10300	10300	10300	10300	10300	10300	10300	10300
Peak axial force	$F_{A_a_pk}$	N	10300	10300	10300	10300	10300	10300	10300	10300
Peak breakdown torque	$M_{K_a_pk}$	Nm	950	950	950	950	950	950	950	950
Continuous duty										
Nominal torque	M_{a_N}	Nm	515	560	510	570	560	610	560	610
Nominal motor speed	n_{e_N}	min^{-1}	2900	2900	2900	2900	2900	2900	3200	3200
Nominal radial force	$F_{R_a_N}$	N	8050	8830	8830	8040	8830	8040	8830	8830
Nominal axial force	$F_{A_a_N}$	N	8800	8800	8800	8800	8800	8800	8800	8800
Nominal breakdown torque	$M_{K_a_N}$	Nm	800	800	800	800	800	800	800	800
General technical data										
Torsional rigidity	c_{tr}	Nm/ arcmin	67	64	65	66	64	65	64	60
Rotational clearance	φ	arcmin	≤ 3 (R) – 5 (N)							
Pull-out rigidity	c_{pr}	Nm/ arcmin	298							
Service life	L	h	> 20000							
Cyclic duration factor	ED	%	≤ 60							
Gear unit temperature	T_{max}	°C	90							
Ambient temperature	T_{amb}	°C	-15 – +40							
Nominal ambient temperature	T_{amb_N}	°C	20							
Efficiency	η	%	92	92	92	92	92	92	92	92
Sound pressure level	L_P	dB (A)	≤ 57	≤ 57	≤ 57	≤ 57	≤ 57	≤ 57	≤ 57	≤ 57
Degree of protection	–	–	IP65							
No-load speed	M_{e_0}	Nm	0.61	0.54	0.54	0.50	0.44	0.41	0.36	0.30
Emergency stop torque	M_{a_es}	Nm	1410	1410	1410	1410	1410	1410	1410	1410
Mass moment of inertia incl. adapter										
Coupling Ø 14 mm	J	10^{-4} kgm^2	0.26	0.31	0.26	0.25	0.25	0.25	0.25	0.25
Coupling Ø 19 mm	J	10^{-4} kgm^2	0.49	0.53	0.48	0.48	0.48	0.48	0.48	0.48
Coupling Ø 24 mm	J	10^{-4} kgm^2	1.76	1.80	1.75	1.75	1.75	1.75	1.75	1.75
Coupling Ø 28 mm	J	10^{-4} kgm^2	2.31	2.36	2.31	2.31	2.31	2.30	2.30	2.30
Mass incl. adapter										
Coupling Ø min – max	m	kg	17.22 – 22.07							

27781410/EN – 03/2022

P5NG53..

57 069 00 19

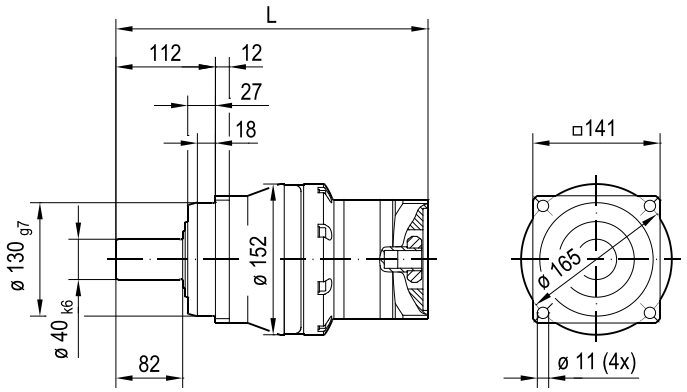

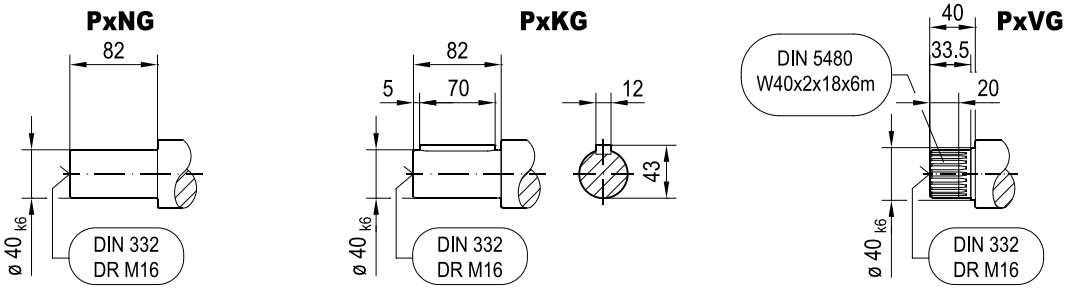

min. □ 95 Fig. A

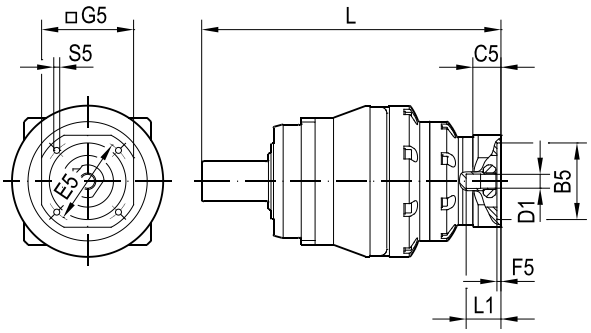

min. □ 120 Fig. B

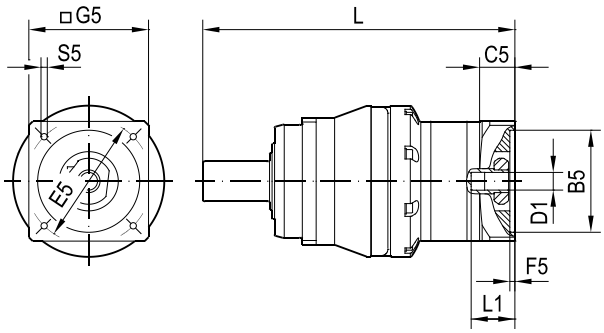

(→ ■ -)	D1	L1	B5	E5	G5	L	C5	F5	S5	Fig.
H.04.03	14	37.4	50	95	95	310	24.2	3.5	M6x15	A
H.05.03	14	37.4	60	75	95	310	24.2	3.5	M6x15	A
H.06.03	14	37.4	80	100	95	310	24.2	4	M6x15	A
H.07.02	14	37.4	60	75	95	310	24.2	3.5	M5x12	A
H.08.01	19	42	80	100	95	317	28	4	M6x15	A
H.08.02	19	41	80	100	120	316	27	4	M6x15	B
H.09.01	19	42	95	115	105	317	28	4	M8x18	A
H.09.02	19	42	95	115	120	317	28	4	M8x18	B
H.10.02	19	42	95	130	120	317	28	4	M8x18	B
H.11.02	19	42	110	130	120	317	28	4	M8x18	B
H.12.01	24	50	95	115	120	332	33.5	5	M8x18	B
H.13.01	24	50	95	130	120	332	33.5	5	M8x18	B
H.14.01	24	50	110	130	120	332	33.5	5	M8x18	B
H.15.01	24	51	110	165	143	333	35	5	M10x24	B
H.16.01	24	51	130	165	143	333	35	5	M10x24	B
H.16.03	24	51	130	165	140	333	35	5	M10x24	B
H.17.01	24	52	180	215	192	334	36	5	M10x24	B
H.18.01	28	60	130	165	143	340	45.5	5	M10x24	B
H.18.02	28	60	130	165	138	340	45.5	5	M10x24	B
H.19.01	28	60	180	215	192	340	45.5	5	M12x28	B
H.19.02	28	60	180	215	215	340	45.5	5	M12x28	B
H.32.02	14	37.4	60	82	95	310	24.2	3.5	M5x12	A

27781410/EN – 03/2022

			P5NG61				
Gear ratio			**3**	**4**	**5**	**7**	**10**
Short-time duty							
Peak torque	M_{a_pk}	Nm	1220	1520	1520	1520	1220
Peak motor speed	n_{e_pk}	min^{-1}	3755	4380	4500	4500	4500
Peak radial force	$F_{R_a_pk}$	N	16100	16100	16100	16100	16100
Peak axial force	$F_{A_a_pk}$	N	16300	16300	16300	16300	16300
Peak breakdown torque	$M_{K_a_pk}$	Nm	1600	1600	1600	1600	1600
Continuous duty							
Nominal torque	M_{a_N}	Nm	535	970	960	860	900
Nominal motor speed	n_{e_N}	min^{-1}	1500	1500	1500	2300	2300
Nominal radial force	$F_{R_a_N}$	N	13700	13700	13700	13700	13700
Nominal axial force	$F_{A_a_N}$	N	13800	13800	13800	13800	13800
Nominal breakdown torque	$M_{K_a_N}$	Nm	1360	1360	1360	1360	1360
General technical data							
Torsional rigidity	c_{tr}	Nm/ arcmin	202	206	206	190	162
Rotational clearance	φ	arcmin	≤ 1 (R) – 3 (N)				
Pull-out rigidity	c_{pr}	Nm/ arcmin	660				
Service life	L	h	> 20000				
Cyclic duration factor	ED	%	≤ 60				
Gear unit temperature	T_{max}	°C	90				
Ambient temperature	T_{amb}	°C	-15 – +40				
Nominal ambient temperature	T_{amb_N}	°C	20				
Efficiency	η	%	97	97	97	97	97
Sound pressure level	L_P	dB (A)	≤ 62	≤ 62	≤ 62	≤ 62	≤ 62
Degree of protection	–	–	IP65				
No-load speed	M_{e_0}	Nm	15.00	12.00	8.00	5.60	3.80
Emergency stop torque	M_{a_es}	Nm	2880	2880	2880	2880	2880
Mass moment of inertia incl. adapter							
Coupling Ø 38 mm	J	10^{-4} kgm^2	55.27	36.05	21.15	14.48	11.04
Coupling Ø 48 mm	J	10^{-4} kgm^2	61.17	41.96	35.02	28.35	24.91
Coupling Ø 55 mm	J	10^{-4} kgm^2	88.06	68.85	61.91	55.53	52.10
Mass incl. adapter							
Coupling Ø min – max	m	kg	39.70 – 51.47				

27781410/EN – 03/2022

P5NG61..

57 047 00 19

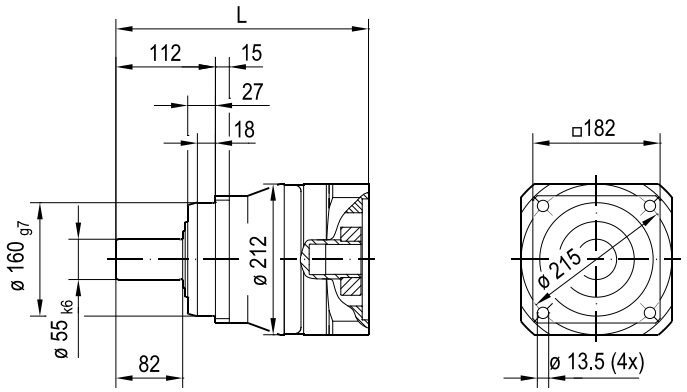

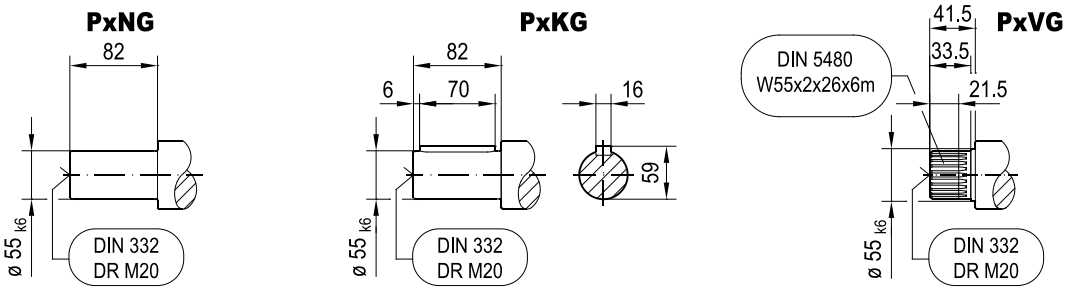

min. □ 215 Fig. B

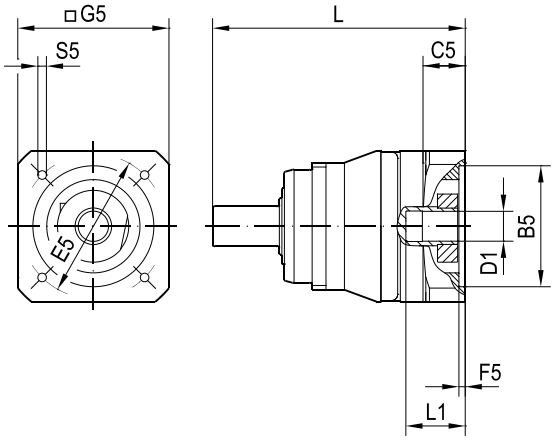

min. □ 260 Fig. C

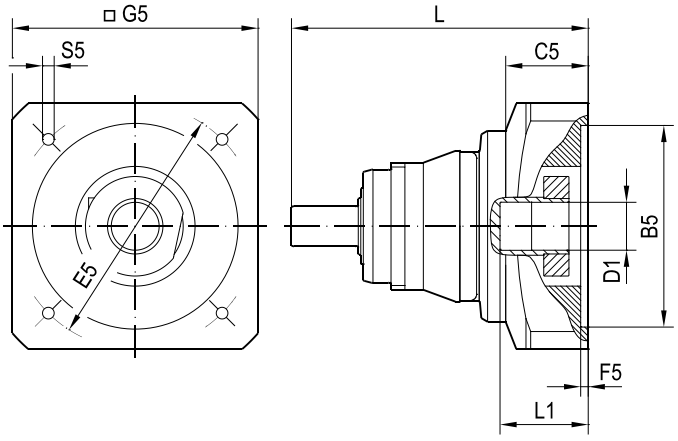

(→ -)	D1	L1	B5	E5	G5	L	C5	F5	S5	Fig.
H.24.02	38	80	114.3	200	215	322	57.5	5	M12x28	B
H.25.03	38	80	180	215	215	322	57.5	5	M12x28	B
H.26.02	38	80	230	265	240	322	57.5	5	M12x28	B
H.27.01	48	85	180	215	215	327	54.5	7	M12x28	B
H.28.01	48	110	230	265	240	352	79.5	7	M12x28	B
H.30.01	48	82	250	300	262	324	51.5	7	M16x36	B
H.31.01	55	110	300	350	316	358	72	7	M16x36	C
H.33.01	55	110	250	300	260	358	72	7	M16x36	C

27781410/EN – 03/2022

			P5NG62										
Gear ratio			**12**	**16**	**20**	**25**	**28**	**30**	**35**	**40**	**50**	**70**	**100**
Short-time duty													
Peak torque	M_{a_pk}	Nm	1490	1520	1520	1520	1520	1490	1520	1520	1520	1420	1220
Peak motor speed	n_{e_pk}	min^{-1}	5000	5000	5000	5000	5000	5000	5000	5000	5000	5000	5000
Peak radial force	$F_{R_a_pk}$	N	16100	16100	16100	16100	16100	16100	16100	16100	16100	16100	16100
Peak axial force	$F_{A_a_pk}$	N	16300	16300	16300	16300	16300	16300	16300	16300	16300	16300	16300
Peak breakdown torque	$M_{K_a_pk}$	Nm	1600	1600	1600	1600	1600	1600	1600	1600	1600	1600	1600
Continuous duty													
Nominal torque	M_{a_N}	Nm	1110	1220	1220	1220	1220	1100	1220	1220	1220	1130	970
Nominal motor speed	n_{e_N}	min^{-1}	2700	2700	2700	2700	2700	2700	2700	2700	2900	3200	3400
Nominal radial force	$F_{R_a_N}$	N	13700	13700	13700	13700	13700	13700	13700	13700	13700	13700	13700
Nominal axial force	$F_{A_a_N}$	N	13800	13800	13800	13800	13800	13800	13800	13800	13800	13800	13800
Nominal breakdown torque	$M_{K_a_N}$	Nm	1360	1360	1360	1360	1360	1360	1360	1360	1360	1360	1360
General technical data													
Torsional rigidity	c_{tr}	Nm/ arcmin	204	213	214	210	209	186	207	201	201	190	174
Rotational clearance	φ	arcmin	≤ 3 (R) – 5 (N)										
Pull-out rigidity	c_{pr}	Nm/ arcmin	660										
Service life	L	h	> 20000										
Cyclic duration factor	ED	%	≤ 60										
Gear unit temperature	T_{max}	°C	90										
Ambient temperature	T_{amb}	°C	-15 – +40										
Nominal ambient temperature	T_{amb_N}	°C	20										
Efficiency	η	%	94	94	94	94	94	94	94	94	94	94	94
Sound pressure level	L_P	dB (A)	≤ 62	≤ 58	≤ 58	≤ 58	≤ 58	≤ 58	≤ 58	≤ 58	≤ 58	≤ 58	≤ 58
Degree of protection	–	–	IP65										
No-load speed	M_{e_0}	Nm	5.20	4.70	3.90	3.60	3.30	3.00	2.80	2.20	1.90	1.80	1.80
Emergency stop torque	M_{a_es}	Nm	2880	2880	2880	2880	2880	2880	2880	2880	2880	2880	2880
Mass moment of inertia incl. adapter													
Coupling Ø 24 mm	J	10^{-4} kgm^2	7.79	6.59	4.89	4.61	3.35	2.70	3.21	2.51	2.44	2.37	2.34
Coupling Ø 32 mm	J	10^{-4} kgm^2	10.67	9.47	7.76	7.48	6.18	5.54	6.04	5.35	5.28	5.21	5.18
Coupling Ø 38 mm	J	10^{-4} kgm^2	13.65	12.45	10.74	10.46	9.21	8.47	9.07	8.27	8.21	8.14	8.10
Coupling Ø 48 mm	J	10^{-4} kgm^2	27.52	26.32	24.62	24.34	23.07	22.44	22.93	22.25	22.18	22.12	22.08
Mass incl. adapter													
Coupling Ø min – max	m	kg	39.97 – 52.15										

27781410/EN – 03/2022

P5NG62..

57 048 00 19

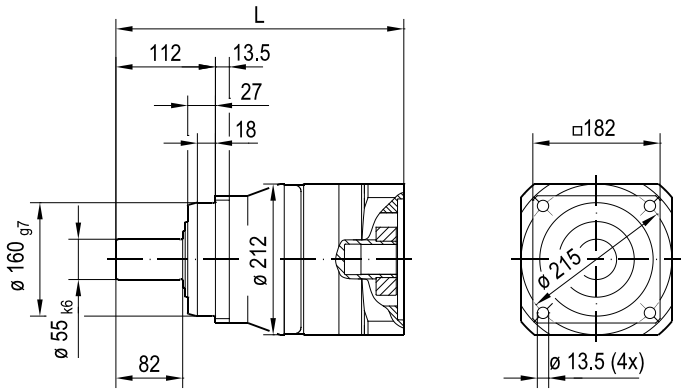

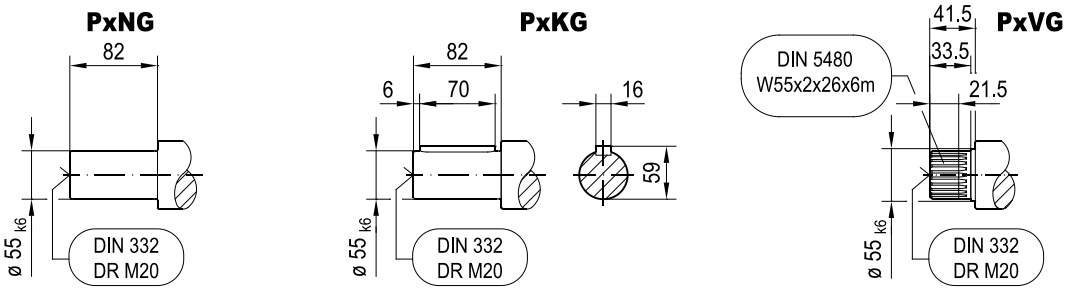

min. □ 152 Fig. A

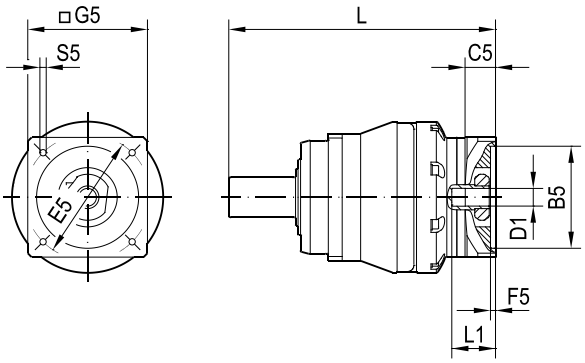

min. □ 215 Fig. B

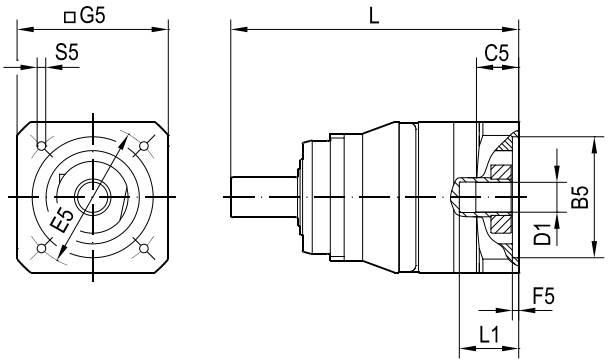

(→ ■ -)	D1	L1	B5	E5	G5	L	C5	F5	S5	Fig.
H.12.02	24	50	95	115	152	337	34.5	5	M8x18	A
H.13.02	24	50	95	130	152	337	34.5	5	M8x18	A
H.14.02	24	50	110	130	152	337	34.5	5	M8x18	A
H.15.02	24	50	110	165	152	337	35	5	M10x24	A
H.16.02	24	50	130	165	152	337	35	5	M10x24	A
H.17.02	24	50	180	215	192	337	35	5	M10x24	A
H.20.01	32	65	130	165	152	349	43	5	M10x24	A
H.21.01	32	65	130	215	192	349	43	5	M12x28	A
H.22.01	32	62	155	190	163	346	40	5	M10x24	A
H.23.01	32	65	180	215	190	349	43	5	M12x28	A
H.23.02	32	65	180	215	215	349	43	5	M12x28	A
H.24.01	38	80	114.3	200	180	365	58.5	5	M12x28	A
H.24.02	38	80	114.3	200	215	371	57.5	5	M12x28	B
H.25.01	38	80	180	215	192	365	58.5	5	M12x28	A
H.25.03	38	80	180	215	215	371	57.5	5	M12x28	B
H.25.04	38	80	180	215	190	365	58.5	5	M12x28	A
H.26.02	38	80	230	265	240	371	57.5	5	M12x28	B
H.27.01	48	85	180	215	215	376	54.5	7	M12x28	B
H.28.01	48	110	230	265	240	401	79.5	7	M12x28	B
H.30.01	48	82	250	300	262	373	51.5	7	M16x36	B

27781410/EN – 03/2022

			P5NG63									
Gear ratio			**64**	**80**	**112**	**125**	**140**	**160**	**175**	**196**	**200**	**245**
Short-time duty												
Peak torque	M_{a_pk}	Nm	1520	1520	1520	1520	1520	1520	1520	1520	1520	1520
Peak motor speed	n_{e_pk}	min^{-1}	5000	5000	5000	5000	5000	5000	5000	5000	5000	5000
Peak radial force	$F_{R_a_pk}$	N	16100	16100	16100	16100	16100	16100	16100	16100	16100	16100
Peak axial force	$F_{A_a_pk}$	N	16300	16300	16300	16300	16300	16300	16300	16300	16300	16300
Peak breakdown torque	$M_{K_a_pk}$	Nm	1600	1600	1600	1600	1600	1600	1600	1600	1600	1600
Continuous duty												
Nominal torque	M_{a_N}	Nm	1220	1230	1260	1280	1290	1290	1290	1290	1290	1290
Nominal motor speed	n_{e_N}	min^{-1}	2900	2900	2900	2900	2900	2900	2900	2900	2900	2900
Nominal radial force	$F_{R_a_N}$	N	13700	13700	13700	13700	13700	13700	13700	13700	13700	13700
Nominal axial force	$F_{A_a_N}$	N	13800	13800	13800	13800	13800	13800	13800	13800	13800	13800
Nominal breakdown torque	$M_{K_a_N}$	Nm	1360	1360	1360	1360	1360	1360	1360	1360	1360	1360
General technical data												
Torsional rigidity	c_{tr}	Nm/ arcmin	208	208	211	202	207	207	202	204	206	201
Rotational clearance	φ	arcmin	≤ 3 (R) – 5 (N)									
Pull-out rigidity	c_{pr}	Nm/ arcmin	660									
Service life	L	h	> 20000									
Cyclic duration factor	ED	%	≤ 60									
Gear unit temperature	T_{max}	°C	90									
Ambient temperature	T_{amb}	°C	-15 – +40									
Nominal ambient temperature	T_{amb_N}	°C	20									
Efficiency	η	%	92	92	92	92	92	92	92	92	92	92
Sound pressure level	L_P	dB (A)	≤ 61	≤ 61	≤ 58	≤ 58	≤ 58	≤ 58	≤ 58	≤ 58	≤ 58	≤ 58
Degree of protection	–	–	IP65									
No-load speed	M_{e_0}	Nm	3.10	2.60	2.00	1.80	1.70	1.50	1.40	1.30	1.30	1.10
Emergency stop torque	M_{a_es}	Nm	2880	2880	2880	2880	2880	2880	2880	2880	2880	2880
Mass moment of inertia incl. adapter												
Coupling Ø 19 mm	J	10^{-4} kgm^2	1.81	1.34	0.89	1.26	0.86	0.66	0.85	0.82	0.64	0.82
Coupling Ø 24 mm	J	10^{-4} kgm^2	3.08	2.61	2.16	2.53	2.12	1.93	2.12	2.09	1.91	2.09
Coupling Ø 28 mm	J	10^{-4} kgm^2	3.63	3.16	2.71	3.08	2.68	2.48	2.67	2.65	2.46	2.64
Coupling Ø 32 mm	J	10^{-4} kgm^2	5.91	5.43	5.00	5.36	4.97	4.77	4.96	4.93	4.75	4.93
Coupling Ø 38 mm	J	10^{-4} kgm^2	8.70	8.22	7.79	8.14	7.75	7.56	7.75	7.72	7.54	7.72
Mass incl. adapter												
Coupling Ø min – max	m	kg	40.51 – 48.43									

27781410/EN – 03/2022

P5NG63..

57 070 00 19

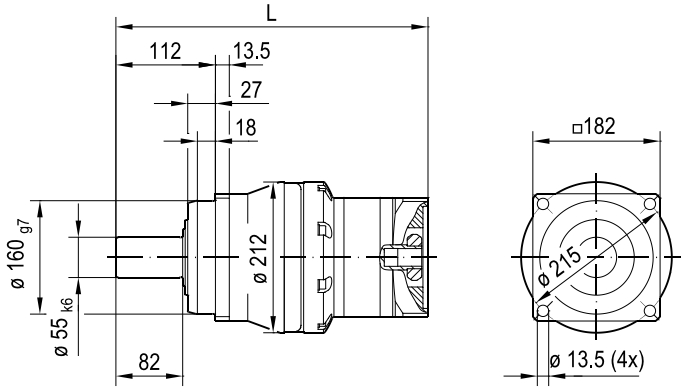

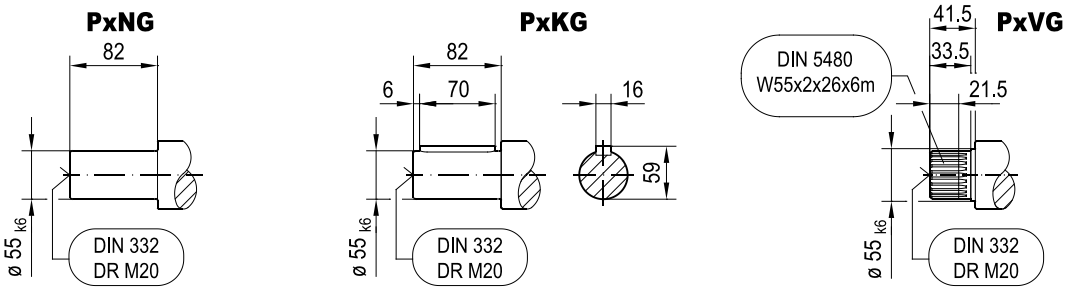

min. □ 120 Fig. A

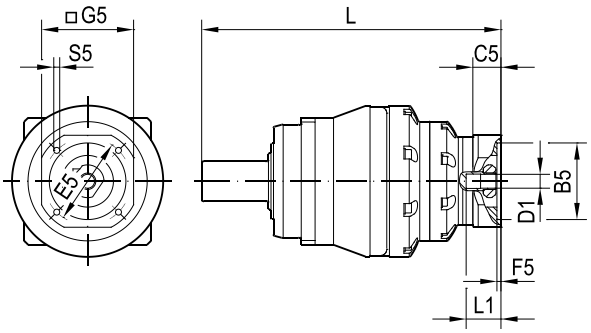

min. □ 152 Fig. B

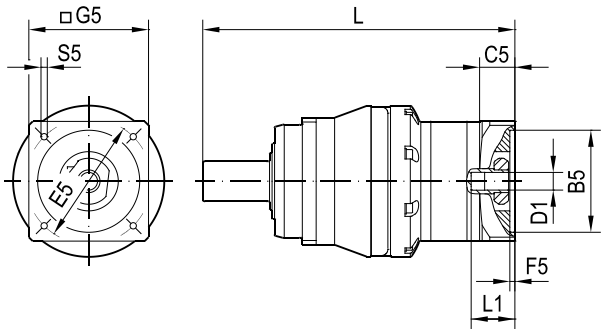

(→)	D1	L1	B5	E5	G5	L	C5	F5	S5	Fig.
H.08.02	19	41	80	100	120	362	27	4	M6x15	A
H.09.02	19	42	95	115	120	363	28	4	M8x18	A
H.10.02	19	42	95	130	120	363	28	4	M8x18	A
H.11.02	19	42	110	130	120	363	28	4	M8x18	A
H.12.01	24	50	95	115	120	377	33.5	5	M8x18	A
H.12.02	24	50	95	115	152	377	34.5	5	M8x18	B
H.13.01	24	50	95	130	120	377	33.5	5	M8x18	A
H.13.02	24	50	95	130	152	377	34.5	5	M8x18	B
H.14.01	24	50	110	130	120	377	33.5	5	M8x18	A
H.14.02	24	50	110	130	152	377	34.5	5	M8x18	B
H.15.01	24	51	110	165	143	379	35	5	M10x24	A
H.15.02	24	50	110	165	152	378	35	5	M10x24	B
H.16.01	24	51	130	165	143	379	35	5	M10x24	A
H.16.02	24	50	130	165	152	378	35	5	M10x24	B
H.16.03	24	51	130	165	140	379	35	5	M10x24	A
H.17.02	24	50	180	215	192	378	35	5	M10x24	B
H.18.01	28	60	130	165	143	385	45.5	5	M10x24	A
H.18.02	28	60	130	165	138	385	45.5	5	M10x24	A
H.20.01	32	65	130	165	152	390	43	5	M10x24	B
H.21.01	32	65	130	215	192	390	43	5	M12x28	B
H.22.01	32	62	155	190	163	387	40	5	M10x24	B
H.23.01	32	65	180	215	190	390	43	5	M12x28	B
H.23.02	32	65	180	215	215	390	43	5	M12x28	B
H.24.01	38	80	114.3	200	180	405	58.5	5	M12x28	B
H.25.01	38	80	180	215	192	405	58.5	5	M12x28	B
H.25.02	38	80	180	215	215	405	58.5	5	M12x28	B
H.25.04	38	80	180	215	190	405	58.5	5	M12x28	B
H.26.01	38	80	230	265	240	405	58.5	5	M12x28	B

27781410/EN – 03/2022

			P5NG63								
Gear ratio			**250**	**280**	**343**	**350**	**400**	**490**	**500**	**700**	**1000**
Short-time duty											
Peak torque	M_{a_pk}	Nm	1520	1520	1520	1520	1520	1520	1520	1520	1510
Peak motor speed	n_{e_pk}	min^{-1}	5000	5000	5000	5000	5000	5000	5000	5000	5000
Peak radial force	$F_{R_a_pk}$	N	16100	16100	16100	16100	16100	16100	16100	16100	16100
Peak axial force	$F_{A_a_pk}$	N	16300	16300	16300	16300	16300	16300	16300	16300	16300
Peak breakdown torque	$M_{K_a_pk}$	Nm	1600	1600	1600	1600	1600	1600	1600	1600	1600
Continuous duty											
Nominal torque	M_{a_N}	Nm	1290	1290	1290	1290	1290	1290	1290	1290	1280
Nominal motor speed	n_{e_N}	min^{-1}	2900	2900	2900	2900	2900	2900	2900	2900	2900
Nominal radial force	$F_{R_a_N}$	N	13700	13700	13700	13700	13700	13700	13700	13700	13700
Nominal axial force	$F_{A_a_N}$	N	13800	13800	13800	13800	13800	13800	13800	13800	13800
Nominal breakdown torque	$M_{K_a_N}$	Nm	1360	1360	1360	1360	1360	1360	1360	1360	1360
General technical data											
Torsional rigidity	c_{tr}	Nm/ arcmin	202	204	188	200	200	188	198	187	170
Rotational clearance	φ	arcmin	≤ 3 (R) – 5 (N)								
Pull-out rigidity	c_{pr}	Nm/ arcmin	660								
Service life	L	h	> 20000								
Cyclic duration factor	ED	%	≤ 60								
Gear unit temperature	T_{max}	°C	90								
Ambient temperature	T_{amb}	°C	-15 – +40								
Nominal ambient temperature	T_{amb_N}	°C	20								
Efficiency	η	%	92	92	92	92	92	92	92	92	92
Sound pressure level	L_P	dB (A)	≤ 58	≤ 58	≤ 58	≤ 58	≤ 58	≤ 58	≤ 58	≤ 58	≤ 58
Degree of protection	–	–	IP65								
No-load speed	M_{e_0}	Nm	1.10	0.96	0.82	0.81	0.73	0.62	0.61	0.47	0.33
Emergency stop torque	M_{a_es}	Nm	2880	2880	2880	2880	2880	2880	2880	2880	2880
Mass moment of inertia incl. adapter											
Coupling Ø 19 mm	J	10^{-4} kgm^2	0.64	0.63	0.82	0.62	0.62	0.62	0.62	0.62	0.62
Coupling Ø 24 mm	J	10^{-4} kgm^2	1.91	1.89	2.09	1.89	1.89	1.89	1.89	1.88	1.88
Coupling Ø 28 mm	J	10^{-4} kgm^2	2.46	2.45	2.64	2.45	2.44	2.45	2.44	2.44	2.44
Coupling Ø 32 mm	J	10^{-4} kgm^2	4.75	4.74	4.93	4.74	4.73	4.73	4.73	4.73	4.73
Coupling Ø 38 mm	J	10^{-4} kgm^2	7.54	7.52	7.72	7.52	7.52	7.52	7.52	7.52	7.51
Mass incl. adapter											
Coupling Ø min – max	m	kg	40.51 – 48.43								

27781410/EN – 03/2022

P5NG63..

57 070 00 19

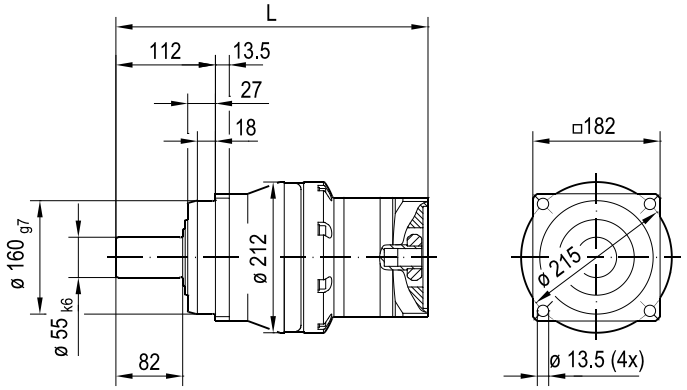

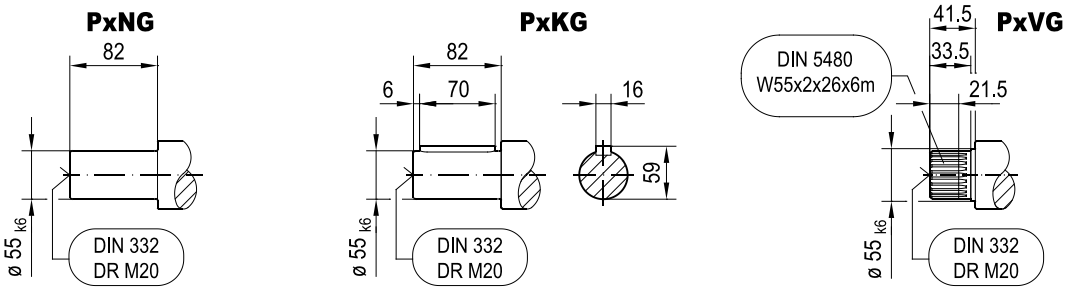

min. □ 120 Fig. A

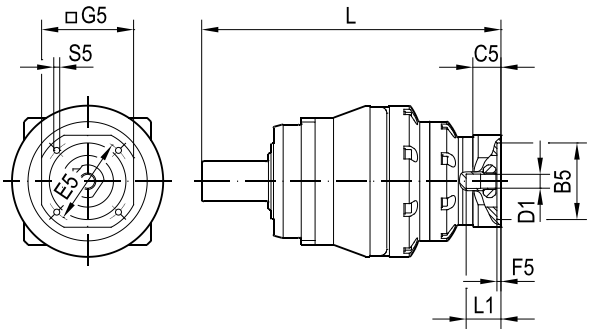

min. □ 152 Fig. B

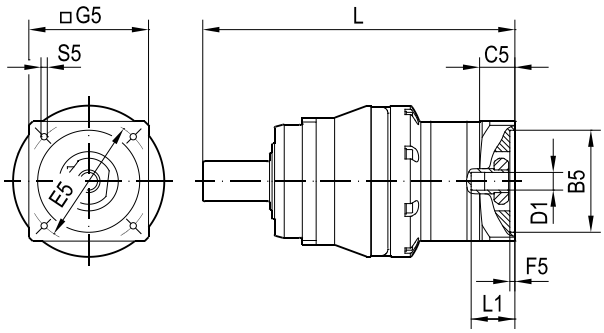

(→ ■ -)	D1	L1	B5	E5	G5	L	C5	F5	S5	Fig.
H.08.02	19	41	80	100	120	362	27	4	M6x15	A
H.09.02	19	42	95	115	120	363	28	4	M8x18	A
H.10.02	19	42	95	130	120	363	28	4	M8x18	A
H.11.02	19	42	110	130	120	363	28	4	M8x18	A
H.12.01	24	50	95	115	120	377	33.5	5	M8x18	A
H.12.02	24	50	95	115	152	377	34.5	5	M8x18	B
H.13.01	24	50	95	130	120	377	33.5	5	M8x18	A
H.13.02	24	50	95	130	152	377	34.5	5	M8x18	B
H.14.01	24	50	110	130	120	377	33.5	5	M8x18	A
H.14.02	24	50	110	130	152	377	34.5	5	M8x18	B
H.15.01	24	51	110	165	143	379	35	5	M10x24	A
H.15.02	24	50	110	165	152	378	35	5	M10x24	B
H.16.01	24	51	130	165	143	379	35	5	M10x24	A
H.16.02	24	50	130	165	152	378	35	5	M10x24	B
H.16.03	24	51	130	165	140	379	35	5	M10x24	A
H.17.02	24	50	180	215	192	378	35	5	M10x24	B
H.18.01	28	60	130	165	143	385	45.5	5	M10x24	A
H.18.02	28	60	130	165	138	385	45.5	5	M10x24	A
H.20.01	32	65	130	165	152	390	43	5	M10x24	B
H.21.01	32	65	130	215	192	390	43	5	M12x28	B
H.22.01	32	62	155	190	163	387	40	5	M10x24	B
H.23.01	32	65	180	215	190	390	43	5	M12x28	B
H.23.02	32	65	180	215	215	390	43	5	M12x28	B
H.24.01	38	80	114.3	200	180	405	58.5	5	M12x28	B
H.25.01	38	80	180	215	192	405	58.5	5	M12x28	B
H.25.02	38	80	180	215	215	405	58.5	5	M12x28	B
H.25.04	38	80	180	215	190	405	58.5	5	M12x28	B
H.26.01	38	80	230	265	240	405	58.5	5	M12x28	B

27781410/EN – 03/2022

			P5NG71				
Gear ratio			**3**	**4**	**5**	**7**	**10**
Short-time duty							
Peak torque	M_{a_pk}	Nm	2010	3150	3150	3020	2390
Peak motor speed	n_{e_pk}	min^{-1}	3000	3000	3000	3000	3000
Peak radial force	$F_{R_a_pk}$	N	22000	22000	22000	22000	22000
Peak axial force	$F_{A_a_pk}$	N	31500	31500	31500	31500	31500
Peak breakdown torque	$M_{K_a_pk}$	Nm	3100	3100	3100	3100	3100
Continuous duty							
Nominal torque	M_{a_N}	Nm	1610	1980	1850	1810	1790
Nominal motor speed	n_{e_N}	min^{-1}	1200	1200	1500	1700	2000
Nominal radial force	$F_{R_a_N}$	N	18700	18700	18700	18700	18700
Nominal axial force	$F_{A_a_N}$	N	26700	26700	26700	26700	26700
Nominal breakdown torque	$M_{K_a_N}$	Nm	2630	2630	2630	2630	2630
General technical data							
Torsional rigidity	c_{tr}	Nm/ arcmin	406	447	447	402	344
Rotational clearance	φ	arcmin	≤ 1 (R) – 3 (N)				
Pull-out rigidity	c_{pr}	Nm/ arcmin	1436				
Service life	L	h	> 20000				
Cyclic duration factor	ED	%	≤ 60				
Gear unit temperature	T_{max}	°C	90				
Ambient temperature	T_{amb}	°C	-15 – +40				
Nominal ambient temperature	T_{amb_N}	°C	20				
Efficiency	η	%	97	97	97	97	97
Sound pressure level	L_P	dB (A)	≤ 64	≤ 64	≤ 64	≤ 64	≤ 64
Degree of protection	–	–	IP65				
No-load speed	M_{e_0}	Nm	26.00	19.00	15.00	8.80	6.40
Emergency stop torque	M_{a_es}	Nm	6190	6190	6190	6190	5790
Mass moment of inertia incl. adapter							
Coupling Ø 55 mm	J	10^{-4} kgm^2	156.75	104.24	85.93	66.76	57.90
Mass incl. adapter							
Coupling Ø min – max	m	kg	68.70 – 69.22				

27781410/EN – 03/2022

P5NG71..

57 049 00 19

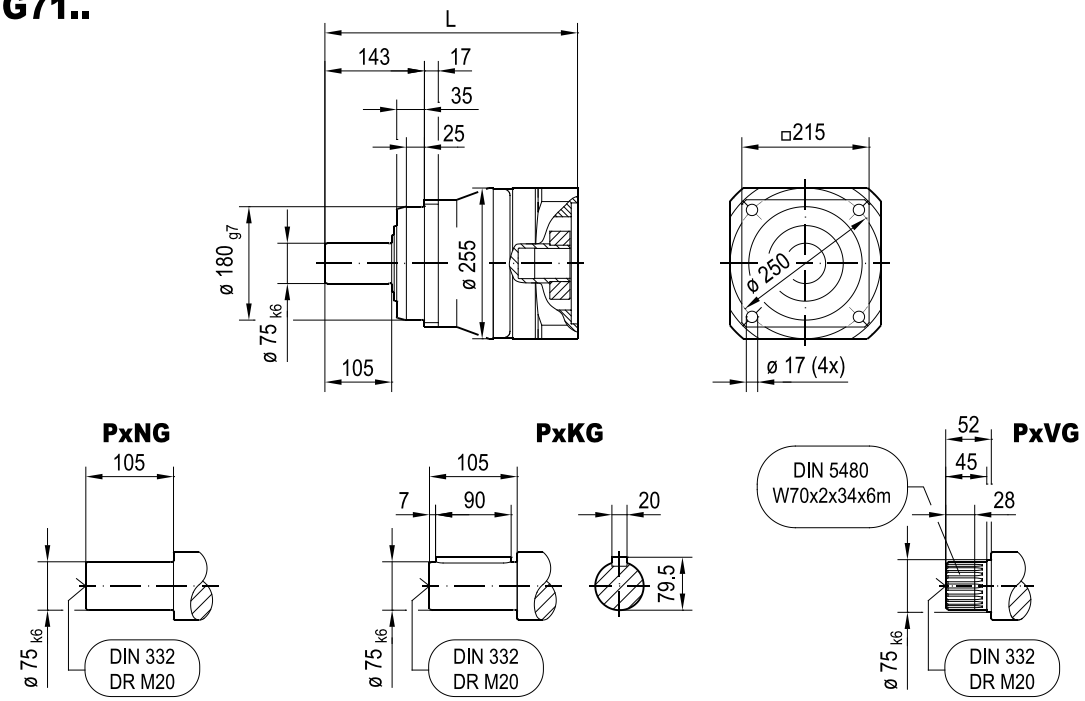

min. □ 260 Fig. B

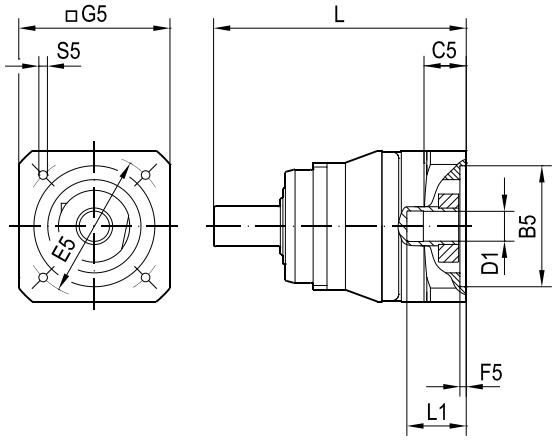

(→ ■ -)	D1	L1	B5	E5	G5	L	C5	F5	S5	Fig.
H.31.01	55	110	300	350	316	399	72	7	M16x36	B
H.33.01	55	110	250	300	260	399	72	7	M16x36	B

27781410/EN – 03/2022

			P5NG72										
Gear ratio			**12**	**16**	**20**	**25**	**28**	**30**	**35**	**40**	**50**	**70**	**100**
Short-time duty													
Peak torque	M_{a_pk}	Nm	3020	3020	3150	3150	3020	3020	3020	2980	3020	2570	2140
Peak motor speed	n_{e_pk}	min^{-1}	4380	4380	4500	4500	4500	4500	4500	4500	4500	4500	4500
Peak radial force	$F_{R_a_pk}$	N	22000	22000	22000	22000	22000	22000	22000	22000	22000	22000	22000
Peak axial force	$F_{A_a_pk}$	N	31500	31500	31500	31500	31500	31500	31500	31500	31500	31500	31500
Peak breakdown torque	$M_{K_a_pk}$	Nm	3100	3100	3100	3100	3100	3100	3100	3100	3100	3100	3100
Continuous duty													
Nominal torque	M_{a_N}	Nm	1330	1330	1320	1640	1350	1330	1670	1420	1760	2060	1710
Nominal motor speed	n_{e_N}	min^{-1}	2500	2500	2500	2500	2500	2500	2500	2500	2500	3000	3000
Nominal radial force	$F_{R_a_N}$	N	18700	18700	18700	18700	18700	18700	18700	18700	18700	18700	18700
Nominal axial force	$F_{A_a_N}$	N	26700	26700	26700	26700	26700	26700	26700	26700	26700	26700	26700
Nominal breakdown torque	$M_{K_a_N}$	Nm	2630	2630	2630	2630	2630	2630	2630	2630	2630	2630	2630
General technical data													
Torsional rigidity	c_{tr}	Nm/ arcmin	451	460	459	446	456	422	443	444	436	390	344
Rotational clearance	φ	arcmin	≤ 3 (R) – 5 (N)										
Pull-out rigidity	c_{pr}	Nm/ arcmin	1436										
Service life	L	h	> 20000										
Cyclic duration factor	ED	%	≤ 60										
Gear unit temperature	T_{max}	°C	90										
Ambient temperature	T_{amb}	°C	-15 – +40										
Nominal ambient temperature	T_{amb_N}	°C	20										
Efficiency	η	%	94	94	94	94	94	94	94	94	94	94	94
Sound pressure level	L_P	dB (A)	≤ 64	≤ 57	≤ 57	≤ 57	≤ 57	≤ 57	≤ 57	≤ 57	≤ 57	≤ 57	≤ 57
Degree of protection	–	–	IP65										
No-load speed	M_{e_0}	Nm	6.60	5.60	5.20	4.80	4.50	4.10	3.60	3.40	3.00	2.60	2.40
Emergency stop torque	M_{a_es}	Nm	6190	6190	6190	6190	6190	6190	6190	6190	6190	6190	5790
Mass moment of inertia incl. adapter													
Coupling Ø 38 mm	J	10^{-4} kgm^2	29.22	25.94	19.78	19.05	13.83	11.25	13.45	10.72	10.54	10.31	10.22
Coupling Ø 48 mm	J	10^{-4} kgm^2	43.09	39.80	33.64	32.91	27.70	25.11	27.33	24.59	24.41	24.18	24.09
Coupling Ø 55 mm	J	10^{-4} kgm^2	69.98	66.69	60.54	59.80	54.88	52.30	54.51	51.78	51.60	51.37	51.28
Mass incl. adapter													
Coupling Ø min – max	m	kg	72.47 – 85.37										

27781410/EN – 03/2022

P5NG72..

57 050 00 19

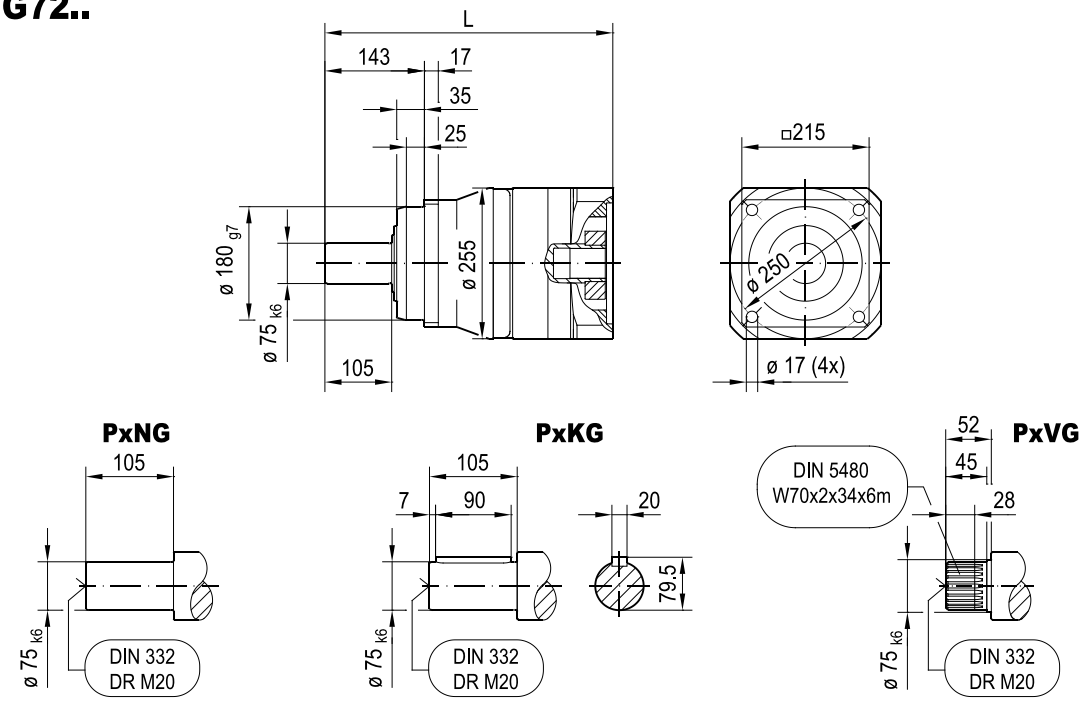

min. □ 215 Fig. A

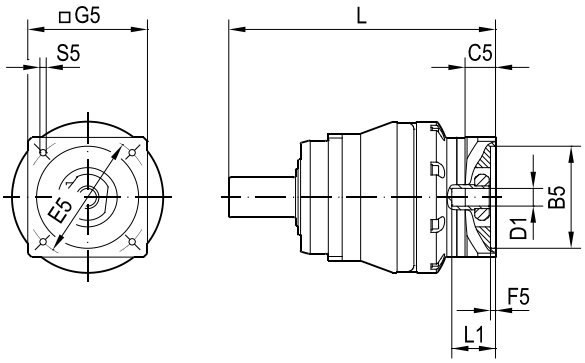

min. □ 260 Fig. B

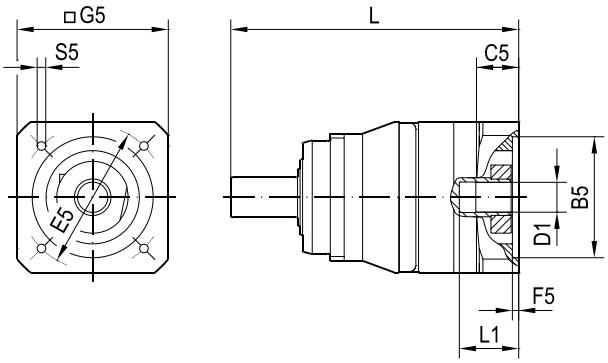

(→ -)	D1	L1	B5	E5	G5	L	C5	F5	S5	Fig.
H.24.02	38	80	114.3	200	215	445	57.5	5	M12x28	A
H.25.03	38	80	180	215	215	445	57.5	5	M12x28	A
H.26.02	38	80	230	265	240	445	57.5	5	M12x28	A
H.27.01	48	85	180	215	215	450	54.5	7	M12x28	A
H.28.01	48	110	230	265	240	475	79.5	7	M12x28	A
H.30.01	48	82	250	300	262	447	51.5	7	M16x36	A
H.31.01	55	110	300	350	316	481	72	7	M16x36	B
H.33.01	55	110	250	300	260	481	72	7	M16x36	B

27781410/EN – 03/2022

			P5NG73									
Gear ratio			**64**	**80**	**112**	**125**	**140**	**160**	**175**	**196**	**200**	**245**
Short-time duty												
Peak torque	M_{a_pk}	Nm	3620	3620	3620	3620	3620	3620	3620	3620	3620	3620
Peak motor speed	n_{e_pk}	min^{-1}	4500	4500	4500	4500	4500	4500	4500	4500	4500	4500
Peak radial force	$F_{R_a_pk}$	N	22000	22000	22000	22000	22000	22000	22000	22000	22000	22000
Peak axial force	$F_{A_a_pk}$	N	31500	31500	31500	31500	31500	31500	31500	31500	31500	31500
Peak breakdown torque	$M_{K_a_pk}$	Nm	3100	3100	3100	3100	3100	3100	3100	3100	3100	3100
Continuous duty												
Nominal torque	M_{a_N}	Nm	1990	2040	2080	2140	2180	2220	2270	2310	2340	2390
Nominal motor speed	n_{e_N}	min^{-1}	3000	3000	3000	3000	3000	3000	3000	3000	3000	3000
Nominal radial force	$F_{R_a_N}$	N	18700	18700	18700	18700	18700	18700	18700	18700	18700	18700
Nominal axial force	$F_{A_a_N}$	N	26700	26700	26700	26700	26700	26700	26700	26700	26700	26700
Nominal breakdown torque	$M_{K_a_N}$	Nm	2630	2630	2630	2630	2630	2630	2630	2630	2630	2630
General technical data												
Torsional rigidity	c_{tr}	Nm/ arcmin	470	469	468	452	464	465	452	463	465	453
Rotational clearance	φ	arcmin	≤ 3 (R) – 5 (N)									
Pull-out rigidity	c_{pr}	Nm/ arcmin	1436									
Service life	L	h	> 20000									
Cyclic duration factor	ED	%	≤ 60									
Gear unit temperature	T_{max}	°C	90									
Ambient temperature	T_{amb}	°C	-15 – +40									
Nominal ambient temperature	T_{amb_N}	°C	20									
Efficiency	η	%	92	92	92	92	92	92	92	92	92	92
Sound pressure level	L_P	dB (A)	≤ 57	≤ 57	≤ 57	≤ 57	≤ 57	≤ 57	≤ 57	≤ 57	≤ 57	≤ 57
Degree of protection	–	–	IP65									
No-load speed	M_{e_0}	Nm	4.30	3.40	2.30	2.10	1.80	1.60	1.50	1.30	1.30	1.00
Emergency stop torque	M_{a_es}	Nm	6190	6190	6190	6190	6190	6190	6190	6190	6190	6190
Mass moment of inertia incl. adapter												
Coupling Ø 24 mm	J	10^{-4} kgm^2	6.46	4.80	3.31	4.52	3.18	2.49	3.17	3.06	2.42	3.05
Coupling Ø 32 mm	J	10^{-4} kgm^2	9.33	7.68	6.13	7.40	6.01	5.33	5.99	5.89	5.27	5.88
Coupling Ø 38 mm	J	10^{-4} kgm^2	12.30	10.65	9.15	10.37	9.03	8.12	9.01	8.91	8.05	8.90
Coupling Ø 48 mm	J	10^{-4} kgm^2	25.37	23.71	22.21	23.44	22.09	21.41	22.07	21.96	21.35	21.96
Mass incl. adapter												
Coupling Ø min – max	m	kg	72.82 – 85.31									

27781410/EN – 03/2022

P5NG73..

57 071 00 19

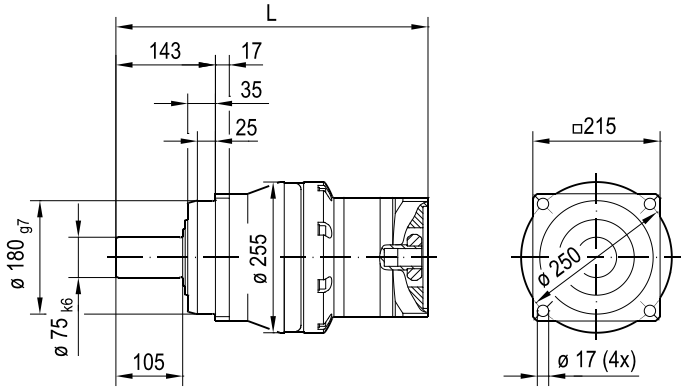

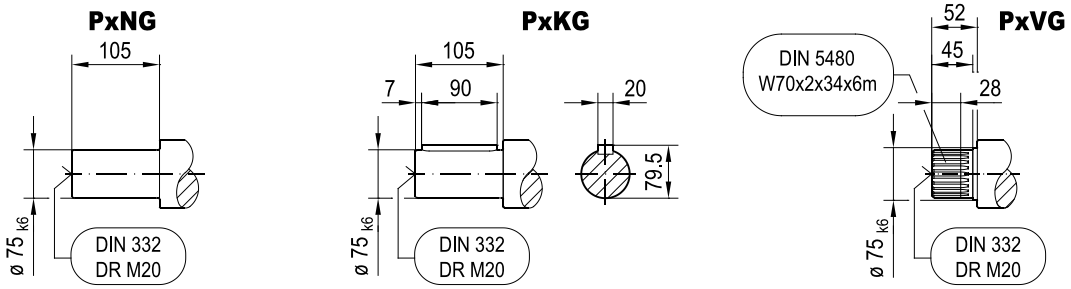

min. □ 152 Fig. A

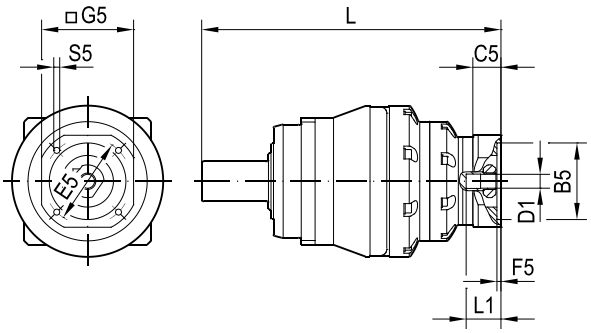

min. □ 215 Fig. B

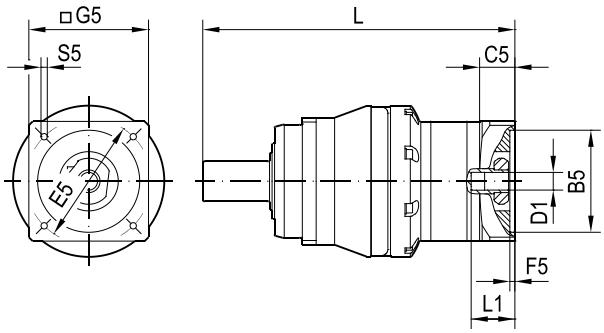

(→ ■ -)	D1	L1	B5	E5	G5	L	C5	F5	S5	Fig.
H.12.02	24	50	95	115	152	460	34.5	5	M8x18	A
H.13.02	24	50	95	130	152	460	34.5	5	M8x18	A
H.14.02	24	50	110	130	152	460	34.5	5	M8x18	A
H.15.02	24	50	110	165	152	460	35	5	M10x24	A
H.16.02	24	50	130	165	152	460	35	5	M10x24	A
H.17.02	24	50	180	215	192	460	35	5	M10x24	A
H.20.01	32	65	130	165	152	472	43	5	M10x24	A
H.21.01	32	65	130	215	192	472	43	5	M12x28	A
H.22.01	32	62	155	190	163	469	40	5	M10x24	A
H.23.01	32	65	180	215	190	472	43	5	M12x28	A
H.23.02	32	65	180	215	215	472	43	5	M12x28	A
H.24.01	38	80	114.3	200	180	488	58.5	5	M12x28	A
H.24.02	38	80	114.3	200	215	494	57.5	5	M12x28	B
H.25.01	38	80	180	215	192	488	58.5	5	M12x28	A
H.25.03	38	80	180	215	215	494	57.5	5	M12x28	B
H.25.04	38	80	180	215	190	488	58.5	5	M12x28	A
H.26.02	38	80	230	265	240	494	57.5	5	M12x28	B
H.27.01	48	85	180	215	215	499	54.5	7	M12x28	B
H.28.01	48	110	230	265	240	524	79.5	7	M12x28	B
H.30.01	48	82	250	300	262	496	51.5	7	M16x36	B

27781410/EN – 03/2022

			P5NG73								
Gear ratio			**250**	**280**	**343**	**350**	**400**	**490**	**500**	**700**	**1000**
Short-time duty											
Peak torque	M_{a_pk}	Nm	3620	3620	3620	3620	3620	3620	3620	3620	2860
Peak motor speed	n_{e_pk}	min^{-1}	4500	4500	4500	4500	4500	4500	4500	4500	4500
Peak radial force	$F_{R_a_pk}$	N	22000	22000	22000	22000	22000	22000	22000	22000	22000
Peak axial force	$F_{A_a_pk}$	N	31500	31500	31500	31500	31500	31500	31500	31500	31500
Peak breakdown torque	$M_{K_a_pk}$	Nm	3100	3100	3100	3100	3100	3100	3100	3100	3100
Continuous duty											
Nominal torque	M_{a_N}	Nm	2410	2450	2490	2530	2570	2610	2620	2650	2430
Nominal motor speed	n_{e_N}	min^{-1}	3000	3000	3000	3000	3000	3000	3000	3000	3000
Nominal radial force	$F_{R_a_N}$	N	18700	18700	18700	18700	18700	18700	18700	18700	18700
Nominal axial force	$F_{A_a_N}$	N	26700	26700	26700	26700	26700	26700	26700	26700	26700
Nominal breakdown torque	$M_{K_a_N}$	Nm	2630	2630	2630	2630	2630	2630	2630	2630	2630
General technical data											
Torsional rigidity	c_{tr}	Nm/ arcmin	452	463	391	451	456	391	449	387	369
Rotational clearance	φ	arcmin	≤ 3 (R) – 5 (N)								
Pull-out rigidity	c_{pr}	Nm/ arcmin	1436								
Service life	L	h	> 20000								
Cyclic duration factor	ED	%	≤ 60								
Gear unit temperature	T_{max}	°C	90								
Ambient temperature	T_{amb}	°C	-15 – +40								
Nominal ambient temperature	T_{amb_N}	°C	20								
Efficiency	η	%	92	92	92	92	92	92	92	92	92
Sound pressure level	L_P	dB (A)	≤ 57	≤ 57	≤ 57	≤ 57	≤ 57	≤ 57	≤ 57	≤ 57	≤ 57
Degree of protection	–	–	IP65								
No-load speed	M_{e_0}	Nm	0.99	0.88	0.70	0.69	0.60	0.48	0.47	0.33	0.21
Emergency stop torque	M_{a_es}	Nm	6190	6190	6190	6190	6190	6190	6190	6190	5790
Mass moment of inertia incl. adapter											
Coupling Ø 24 mm	J	10^{-4} kgm^2	2.42	2.36	3.04	2.36	2.33	2.36	2.33	2.33	2.33
Coupling Ø 32 mm	J	10^{-4} kgm^2	5.26	5.21	5.87	5.20	5.18	5.20	5.17	5.17	5.17
Coupling Ø 38 mm	J	10^{-4} kgm^2	8.05	8.00	8.89	7.99	7.96	7.99	7.96	7.96	7.96
Coupling Ø 48 mm	J	10^{-4} kgm^2	21.34	21.29	21.95	21.29	21.26	21.28	21.26	21.26	21.26
Mass incl. adapter											
Coupling Ø min – max	m	kg	72.82 – 85.31								

27781410/EN – 03/2022

P5NG73..

57 071 00 19

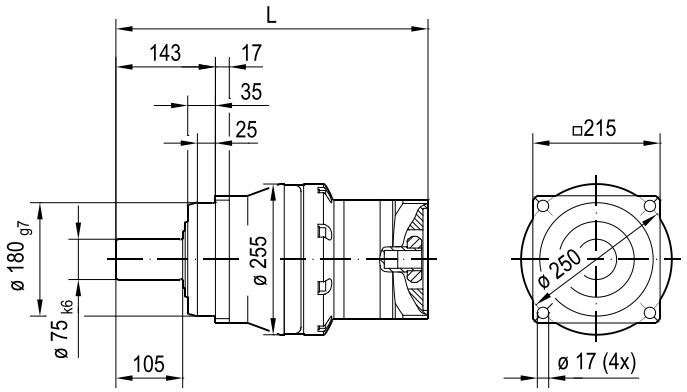

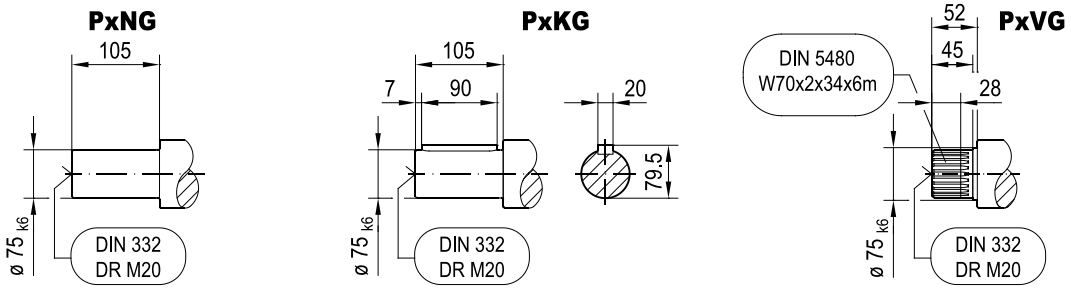

min. □ 152 Fig. A

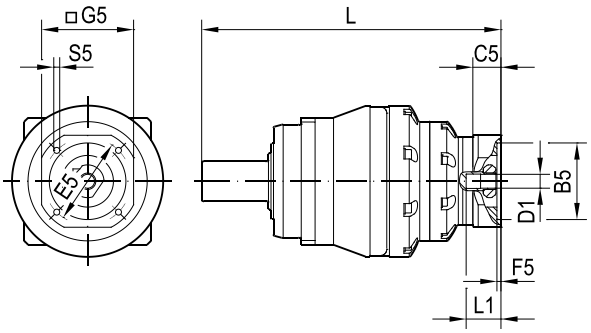

min. □ 215 Fig. B

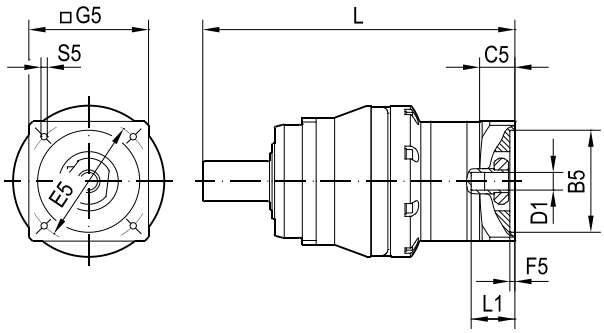

(→ ■ -)	D1	L1	B5	E5	G5	L	C5	F5	S5	Fig.
H.12.02	24	50	95	115	152	460	34.5	5	M8x18	A
H.13.02	24	50	95	130	152	460	34.5	5	M8x18	A
H.14.02	24	50	110	130	152	460	34.5	5	M8x18	A
H.15.02	24	50	110	165	152	460	35	5	M10x24	A
H.16.02	24	50	130	165	152	460	35	5	M10x24	A
H.17.02	24	50	180	215	192	460	35	5	M10x24	A
H.20.01	32	65	130	165	152	472	43	5	M10x24	A
H.21.01	32	65	130	215	192	472	43	5	M12x28	A
H.22.01	32	62	155	190	163	469	40	5	M10x24	A
H.23.01	32	65	180	215	190	472	43	5	M12x28	A
H.23.02	32	65	180	215	215	472	43	5	M12x28	A
H.24.01	38	80	114.3	200	180	488	58.5	5	M12x28	A
H.24.02	38	80	114.3	200	215	494	57.5	5	M12x28	B
H.25.01	38	80	180	215	192	488	58.5	5	M12x28	A
H.25.03	38	80	180	215	215	494	57.5	5	M12x28	B
H.25.04	38	80	180	215	190	488	58.5	5	M12x28	A
H.26.02	38	80	230	265	240	494	57.5	5	M12x28	B
H.27.01	48	85	180	215	215	499	54.5	7	M12x28	B
H.28.01	48	110	230	265	240	524	79.5	7	M12x28	B
H.30.01	48	82	250	300	262	496	51.5	7	M16x36	B

27781410/EN – 03/2022

4 Servo gear units of the type P6.G

The servo gear units in performance class 6 are especially suitable for applications in continuous duty with a high nominal speed. A modified bearing concept reduces thermal losses and thus ensures a high efficiency.

Likewise, a wear-reduced coating of the gearing parts increases the service life.

Gear units in performance class 6 have the following, outstanding properties:

- Durability

  Increased service life for high cost-efficiency
- Efficiency

  High efficiency for high-performance applications
- Cyclic duration factor

  Optimized continuous duty allows for more possible applications

The following shaft-hub connections are available for servo gear units of the type P6.G:

- N: Smooth solid shaft
- K: Solid shaft with keyway
- V: Splined solid shaft
- B: Flange block (without index hole)
- C: Flange block (with index bore)

SEW-EURODRIVE
76646 Bruchsal / Germany
Made in Germany

Sample depiction of the torque characteristic (nominal torque to peak torque) in performance class 6. Solid shaft and flange block 1-stage i = 5, 2-stage i = 25.

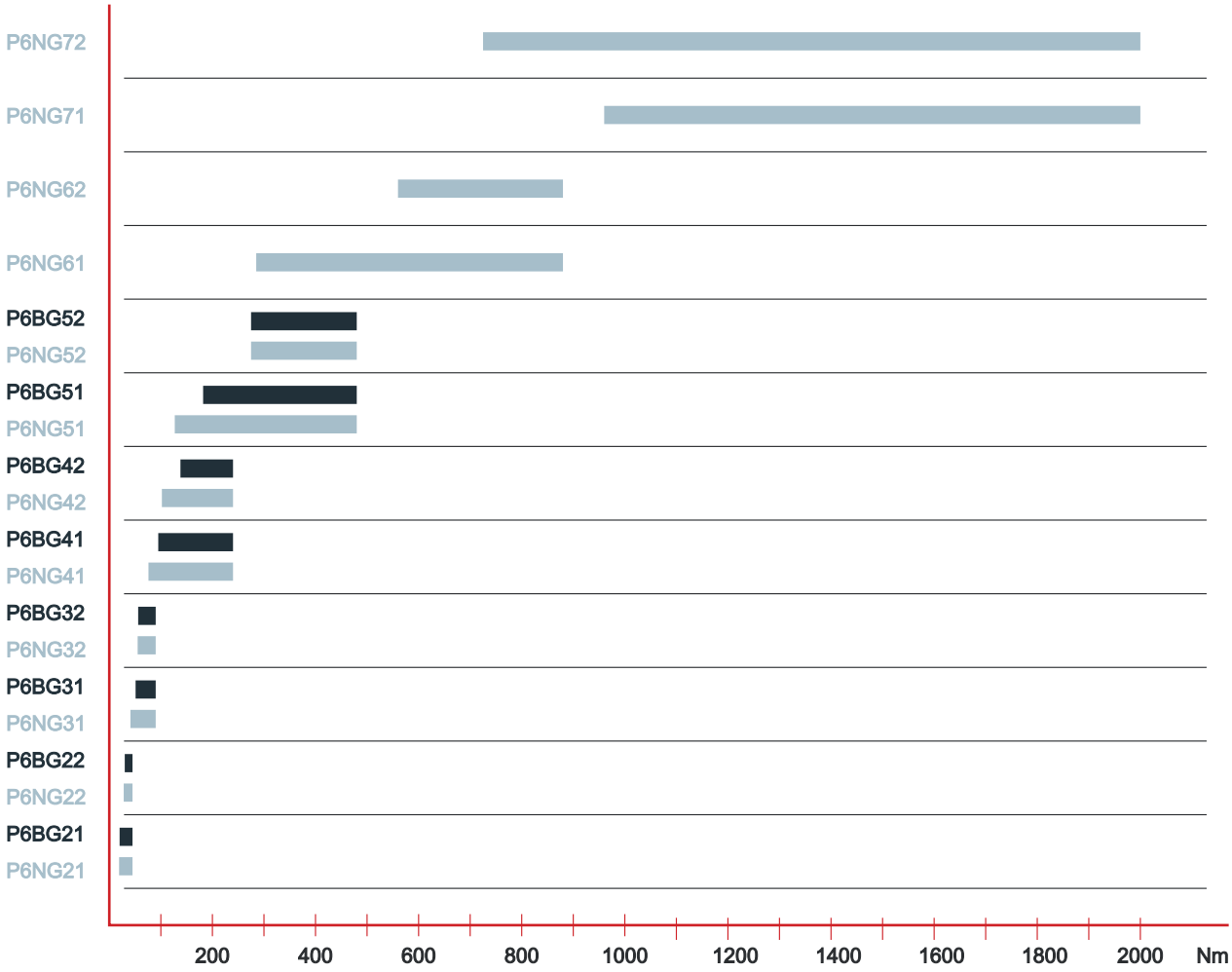

The permitted speeds are between 4500 and 6000 min^{-1}. For detailed information, refer to the technical data. (▸ 130)

27781410/EN – 03/2022

4.1 Possible use and target applications

4.1.1 Filling and transfer starwheel

Bottles are being filled with liquids. A central role in this procedure is played by the filling and transfer starwheels, where the filling process is handled quickly and reliably. For this task, precision, torsional rigidity, and low operating temperatures are important throughout the entire service life. Planetary servo gear units of the type P6.G are the right solution to ensure all this.

Features of P6.G

- Perfectly suitable for continuous duty
- Precise and reliable throughout the entire service life
- Compact design for efficient machine structures

Your benefits

- Suitable for installation in small or enclosed mounting spaces, especially in continuous duty, as the thermal losses of the gear unit are reduced
- Coated gearing components and a lubricant of the SEW-EURODRIVE GearOil series are the key to a long service life of at least 30 000 operating hours
- Low rotational clearance and high torsional rigidity ensure the positioning accuracy required to transfer bottles from one station to the next

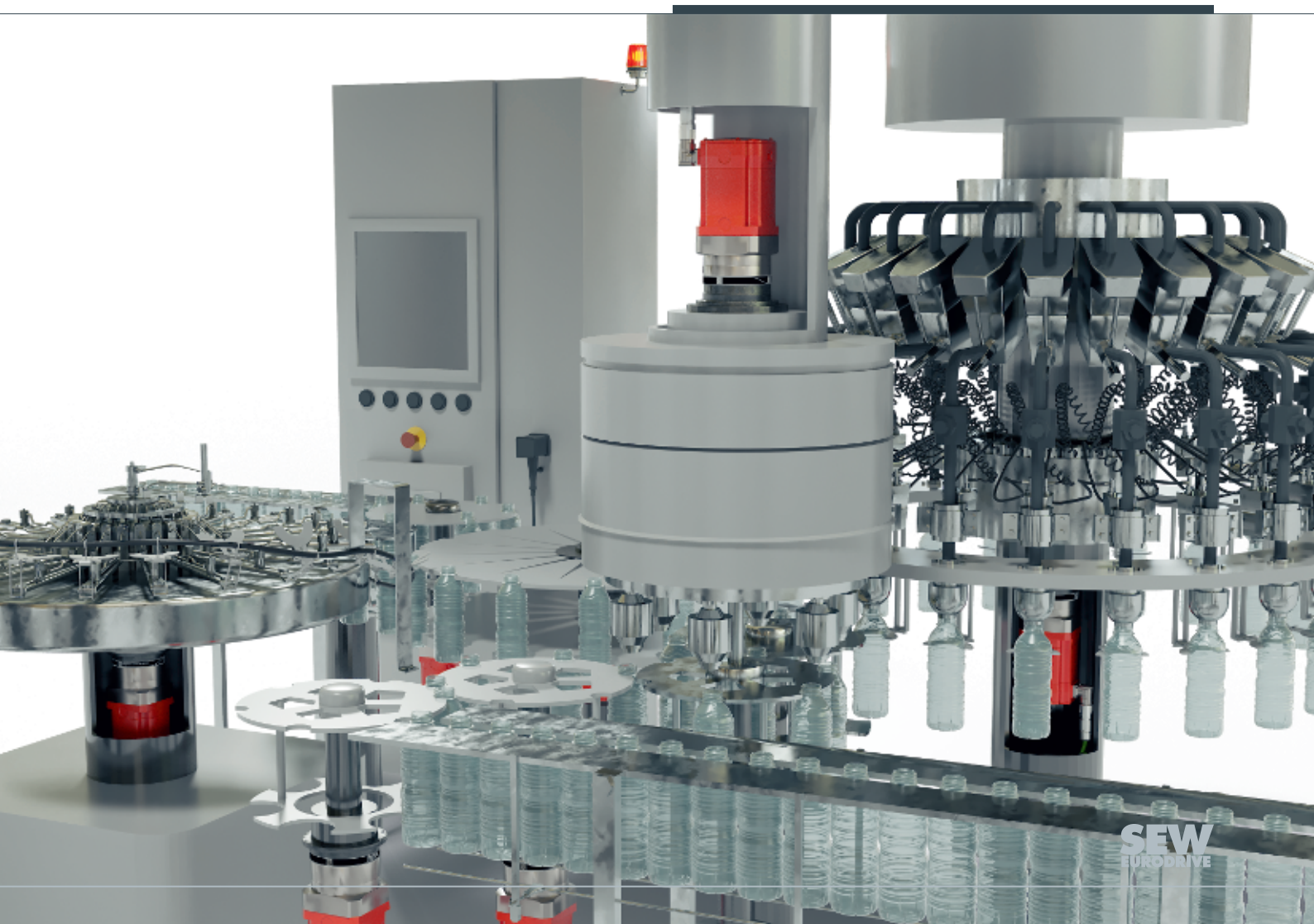

4.1.2 Printing machine

For multi-color printing and further processing, the printing medium passes through several machine sections. During this procedure, high speeds and greatest precision are required to obtain flawless printing and cutting results. Even during continuous duty in the compact design. Planetary servo gear units of the type P6.G meet these requirements and offer an ideal solution.

Features of P6.G

- High rotational speeds, even in continuous duty
- Maximum precision due to thermal length compensation in the motor adapter using a bellows coupling
- High efficiency ensures very small losses and a long service life of at least 30 000 operating hours

Your benefits

- Flawless printing and cutting results due to the uniform operation of the planetary gear units, as well as the precise properties, that meet the most important requirements of printing machines
- Low operating temperatures due to the high gear unit efficiency and the low strain on lubrication and sealing systems

4.1.3 Diaper machine

In a diaper machine, several production steps are performed with a high level of dynamics and precision, from feeding in the pulp sheets to attaching the elastic waist band. And all these steps are performed during continuous duty and in very compact machine structures. Planetary servo gear units of the type P6.G will provide you with an optimal solution for this task.

Features of P6.G

- Long-lasting and optimized for continuous duty
- Efficient operation due to high and reliable input speeds
- High efficiency ensures very small losses and a long service life of at least 30 000 operating hours

Your benefits

- High material throughput of the machine due to the high permitted speeds in continuous duty
- High system availability due to the long service life of at least 30 000 operating hours
- Flexible integration into machines due to selection options using solid shafts or flange block output shafts

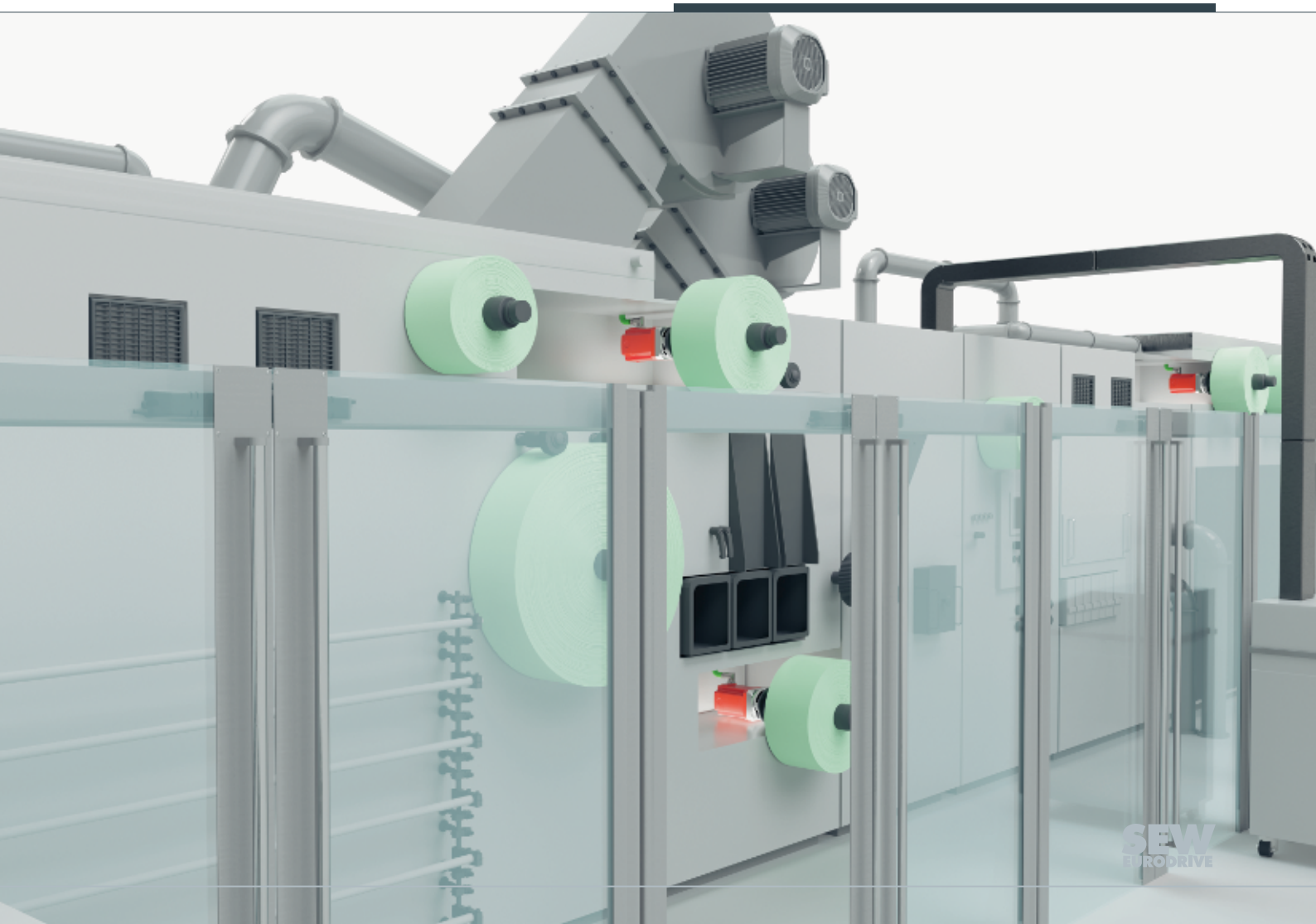

4.2 Technical data and dimension sheets

For further information regarding the technical data and dimension sheets, refer to chapter "Appendix" (▶ 261).

			P6BG21			
Gear ratio			**4**	**5**	**7**	**10**
Short-time duty						
Peak torque	M_{a_pk}	Nm	45	45	45	42
Peak motor speed	n_{e_pk}	min^{-1}	6000	6000	6000	6000
Peak radial force	$F_{R_a_pk}$	N	1780	1780	1780	1780
Peak axial force	$F_{A_a_pk}$	N	1890	1890	1890	1890
Peak breakdown torque	$M_{K_a_pk}$	Nm	75	75	75	75
Continuous duty						
Nominal torque	M_{a_N}	Nm	20	20	20	20
Nominal motor speed	n_{e_N}	min^{-1}	4500	4500	4500	4500
Nominal radial force	$F_{R_a_N}$	N	595	640	715	800
Nominal axial force	$F_{A_a_N}$	N	910	980	1100	1240
Nominal breakdown torque	$M_{K_a_N}$	Nm	31	34	38	43
General technical data						
Torsional rigidity	c_{tr}	Nm/ arcmin	15	14	11	7
Rotational clearance	φ	arcmin	≤ 4 (R) – 6 (N)			
Pull-out rigidity	c_{pr}	Nm/ arcmin	70			
Service life	L	h	> 30000			
Cyclic duration factor	ED	%	≤ 100			
Gear unit temperature	T_{max}	°C	90			
Ambient temperature	T_{amb}	°C	-15 – +40			
Nominal ambient temperature	T_{amb_N}	°C	20			
Efficiency	η	%	98	98	98	98
Sound pressure level	L_P	dB (A)	≤ 58	≤ 58	≤ 58	≤ 58
Degree of protection	–	–	IP65			
No-load speed	M_{e_0}	Nm	0.45	0.38	0.30	0.25
Emergency stop torque	M_{a_es}	Nm	100	100	100	90
Mass moment of inertia incl. adapter						
Coupling Ø 11 mm	J	10^{-4} kgm^2	0.16	0.12	0.09	0.08
Coupling Ø 14 mm	J	10^{-4} kgm^2	0.30	0.27	0.24	0.22
Coupling Ø 19 mm	J	10^{-4} kgm^2	0.53	0.49	0.46	0.45
Mass incl. adapter						
Coupling Ø min – max	m	kg	1.31 – 2.24			

27781410/EN – 03/2022

P6BG21..

57 043 00 19

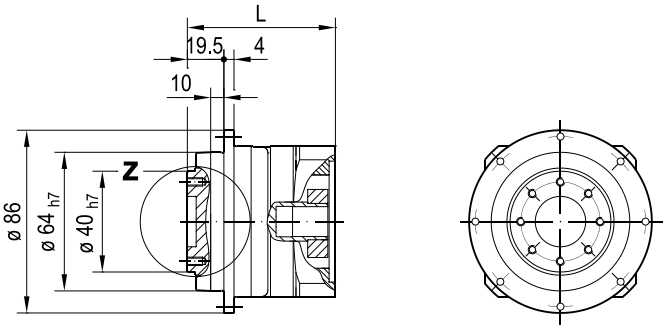

PxBG

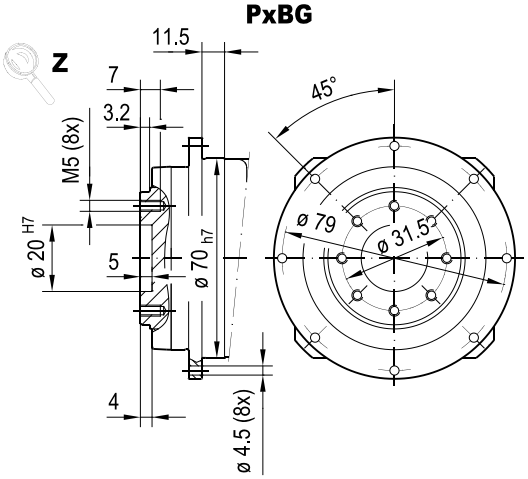

PxCG

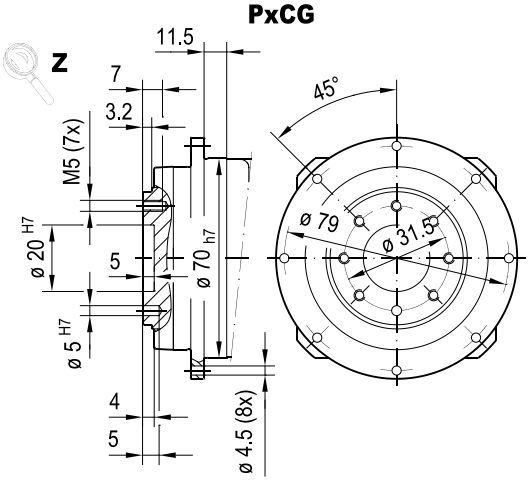

min. □ 73 **Fig. B**

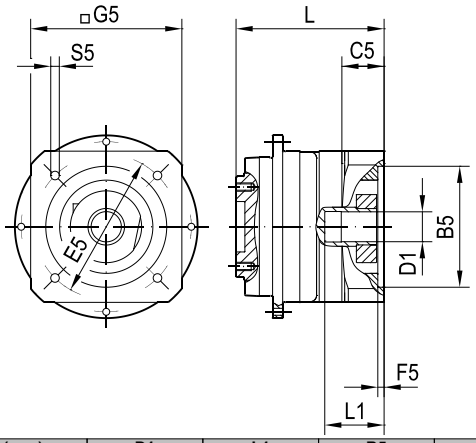

min. □ 95 **Fig. C**

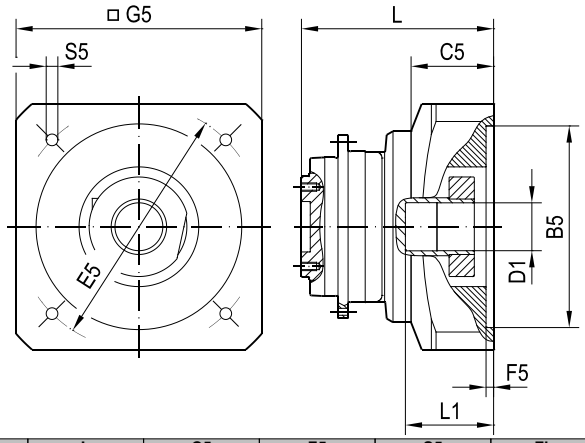

(→ ■ -)	D1	L1	B5	E5	G5	L	C5	F5	S5	Fig.
H.01.02	11	37.6	40	63	73	78	22.3	0	M4x12	B
H.02.03	11	37.6	60	75	73	78	22.3	3.5	M5x12	B
H.03.02	11	37.6	60	90	73	78	22.3	3.5	M5x12	B
H.04.02	14	37.4	50	95	95	81	25.2	3.5	M6x15	B
H.05.02	14	37.4	60	75	73	81	25.2	3.5	M6x15	B
H.06.02	14	37.4	80	100	95	81	25.2	4	M6x15	B
H.06.05	14	37.4	80	100	88	81	25.2	4	M6x15	B
H.07.01	14	37.4	60	75	73	81	25.2	3.5	M5x12	B
H.08.01	19	42	80	100	95	88	28	4	M6x15	C
H.09.01	19	42	95	115	105	88	28	4	M8x18	C
H.10.01	19	42	95	130	120	88	28	4	M8x18	C
H.11.01	19	42	110	130	120	88	28	4	M8x18	C
H.32.01	14	37.4	60	82	73	81	25.2	3.5	M5x12	B

27781410/EN – 03/2022

			P6BG22								
Gear ratio			**16**	**20**	**25**	**28**	**35**	**40**	**50**	**70**	**100**
Short-time duty											
Peak torque	M_{a_pk}	Nm	45	45	45	45	45	45	45	45	42
Peak motor speed	n_{e_pk}	min^{-1}	6000	6000	6000	6000	6000	6000	6000	6000	6000
Peak radial force	$F_{R_a_pk}$	N	1780	1780	1780	1780	1780	1780	1780	1780	1780
Peak axial force	$F_{A_a_pk}$	N	1890	1890	1890	1890	1890	1890	1890	1890	1890
Peak breakdown torque	$M_{K_a_pk}$	Nm	75	75	75	75	75	75	75	75	75
Continuous duty											
Nominal torque	M_{a_N}	Nm	30	30	30	30	30	30	30	30	30
Nominal motor speed	n_{e_N}	min^{-1}	5500	5500	5500	5500	5500	5500	5500	5500	5500
Nominal radial force	$F_{R_a_N}$	N	880	950	1020	1060	1140	1200	1290	1440	1510
Nominal axial force	$F_{A_a_N}$	N	1350	1460	1570	1600	1600	1600	1600	1600	1600
Nominal breakdown torque	$M_{K_a_N}$	Nm	47	50	54	56	61	63	63	63	63
General technical data											
Torsional rigidity	c_{tr}	Nm/ arcmin	17	17	15	16	15	15	14	12	9
Rotational clearance	φ	arcmin	≤ 4 (R) – 6 (N)								
Pull-out rigidity	c_{pr}	Nm/ arcmin	70								
Service life	L	h	> 30000								
Cyclic duration factor	ED	%	≤ 100								
Gear unit temperature	T_{max}	°C	90								
Ambient temperature	T_{amb}	°C	-15 – +40								
Nominal ambient temperature	T_{amb_N}	°C	20								
Efficiency	η	%	94	94	94	94	94	94	94	94	94
Sound pressure level	L_P	dB (A)	≤ 57	≤ 57	≤ 57	≤ 57	≤ 57	≤ 57	≤ 57	≤ 57	≤ 57
Degree of protection	–	–	IP65								
No-load speed	M_{e_0}	Nm	0.22	0.18	0.18	0.17	0.14	0.14	0.14	0.14	0.13
Emergency stop torque	M_{a_es}	Nm	100	100	100	100	100	100	100	100	90
Mass moment of inertia incl. adapter											
Coupling Ø 11 mm	J	10^{-4} kgm^2	0.10	0.09	0.09	0.07	0.07	0.07	0.07	0.07	0.07
Coupling Ø 14 mm	J	10^{-4} kgm^2	0.25	0.23	0.23	0.22	0.22	0.21	0.21	0.21	0.21
Mass incl. adapter											
Coupling Ø min – max	m	kg	1.77 – 2.14								

27781410/EN – 03/2022

P6BG22..

57 044 00 19

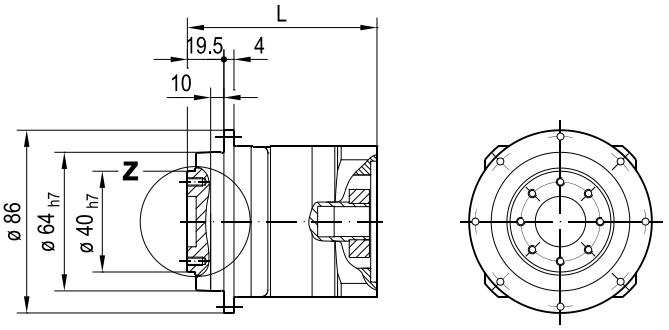

PxBG

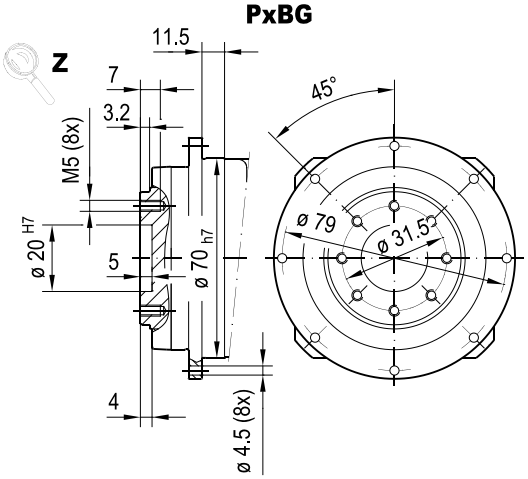

PxCG

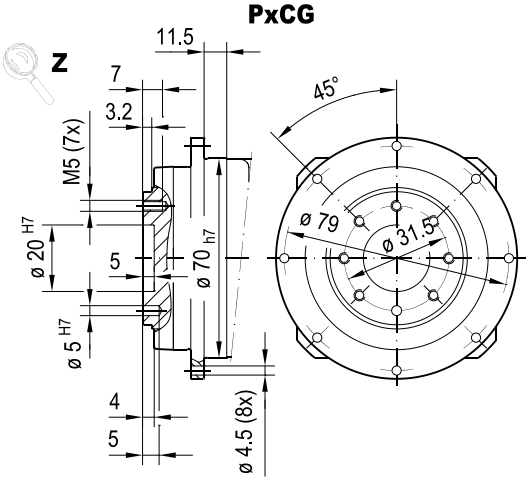

min. □ 55 Fig. A

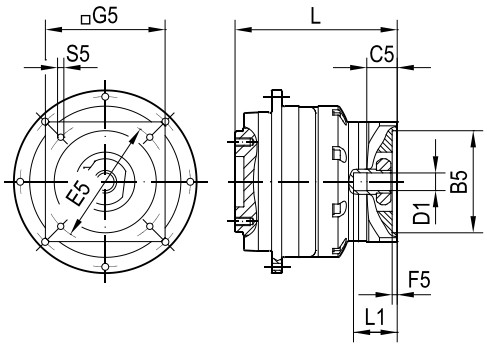

min. □ 73 Fig. B

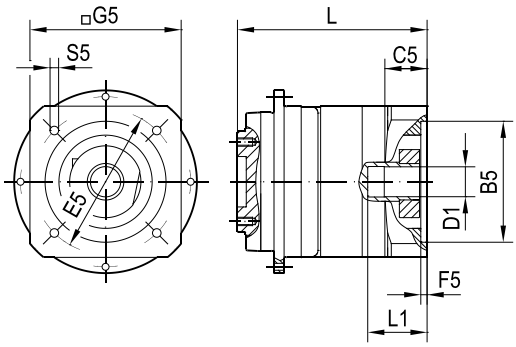

(→ 📖 -)	D1	L1	B5	E5	G5	L	C5	F5	S5	Fig.
H.01.03	11	37.6	40	63	55	101	19.7	3.5	M4x12	A
H.02.04	11	37.6	60	75	62	101	19.7	3.5	M5x12	A
H.02.05	11	37.6	60	75	73	101	19.7	3.5	M5x12	A
H.03.03	11	37.6	60	90	73	101	19.7	3.5	M5x12	A
H.04.02	14	37.4	50	95	95	104	25.2	3.5	M6x15	B
H.05.02	14	37.4	60	75	73	104	25.2	3.5	M6x15	B
H.06.02	14	37.4	80	100	95	104	25.2	4	M6x15	B
H.06.05	14	37.4	80	100	88	104	25.2	4	M6x15	B
H.07.01	14	37.4	60	75	73	104	25.2	3.5	M5x12	B
H.32.01	14	37.4	60	82	73	104	25.2	3.5	M5x12	B

27781410/EN – 03/2022

			P6BG31			
Gear ratio			**4**	**5**	**7**	**10**
Short-time duty						
Peak torque	M_{a_pk}	Nm	90	90	90	70
Peak motor speed	n_{e_pk}	min^{-1}	6000	6000	6000	6000
Peak radial force	$F_{R_a_pk}$	N	4410	4410	4410	4410
Peak axial force	$F_{A_a_pk}$	N	3510	3510	3510	3510
Peak breakdown torque	$M_{K_a_pk}$	Nm	235	235	235	235
Continuous duty						
Nominal torque	M_{a_N}	Nm	51	51	52	53
Nominal motor speed	n_{e_N}	min^{-1}	4500	4500	4500	4500
Nominal radial force	$F_{R_a_N}$	N	1070	1150	1290	1450
Nominal axial force	$F_{A_a_N}$	N	1700	1830	2050	2310
Nominal breakdown torque	$M_{K_a_N}$	Nm	82	89	99	112
General technical data						
Torsional rigidity	c_{tr}	Nm/ arcmin	38	37	30	21
Rotational clearance	φ	arcmin	≤ 2 (R) – 4 (N)			
Pull-out rigidity	c_{pr}	Nm/ arcmin	177			
Service life	L	h	> 30000			
Cyclic duration factor	ED	%	≤ 100			
Gear unit temperature	T_{max}	°C	90			
Ambient temperature	T_{amb}	°C	-15 – +40			
Nominal ambient temperature	T_{amb_N}	°C	20			
Efficiency	η	%	99	99	99	99
Sound pressure level	L_P	dB (A)	≤ 59	≤ 59	≤ 59	≤ 59
Degree of protection	–	–	IP65			
No-load speed	M_{e_0}	Nm	0.88	0.72	0.49	0.40
Emergency stop torque	M_{a_es}	Nm	185	250	250	210
Mass moment of inertia incl. adapter						
Coupling Ø 14 mm	J	10^{-4} kgm^2	0.67	0.51	0.36	0.28
Coupling Ø 19 mm	J	10^{-4} kgm^2	0.90	0.73	0.59	0.51
Coupling Ø 24 mm	J	10^{-4} kgm^2	2.17	2.00	1.86	1.78
Mass incl. adapter						
Coupling Ø min – max	m	kg	3.17 – 6.18			

27781410/EN – 03/2022

P6BG31..

57 025 00 19

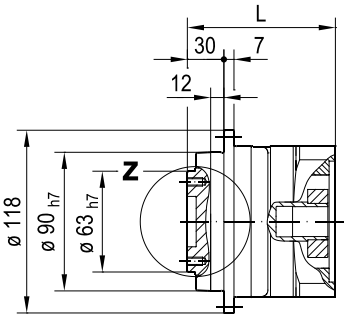

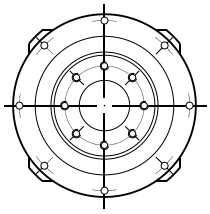

PxBG

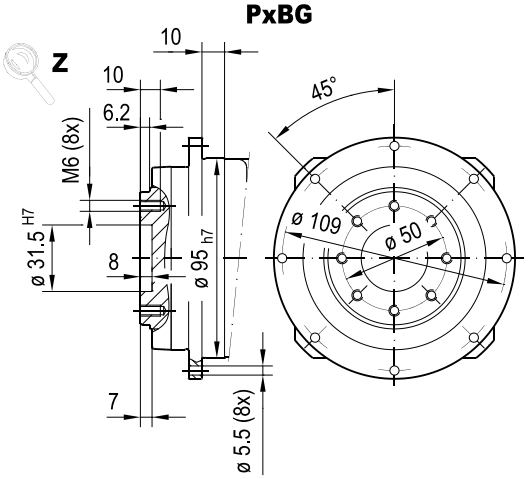

PxCG

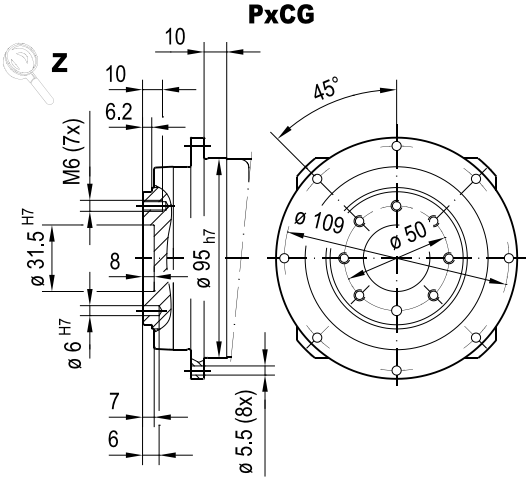

min. □ 95 Fig. B

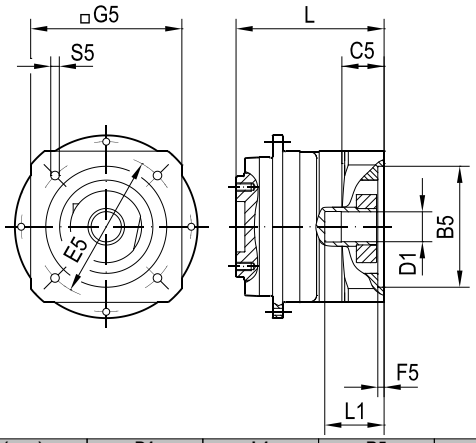

min. □ 120 Fig. C

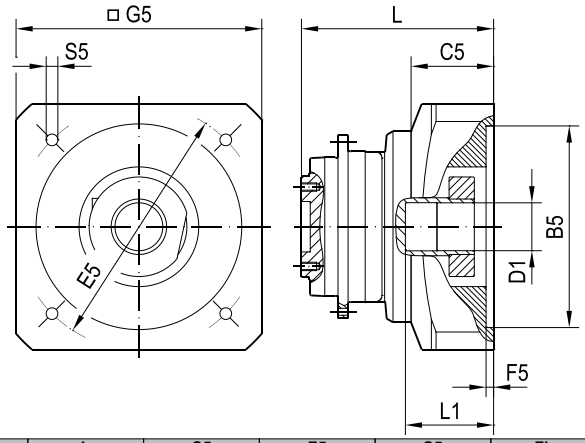

(→ ■ -)	D1	L1	B5	E5	G5	L	C5	F5	S5	Fig.
H.04.03	14	37.4	50	95	95	94	24.2	3.5	M6x15	B
H.05.03	14	37.4	60	75	95	94	24.2	3.5	M6x15	B
H.06.03	14	37.4	80	100	95	94	24.2	4	M6x15	B
H.07.02	14	37.4	60	75	95	94	24.2	3.5	M5x12	B
H.08.01	19	42	80	100	95	101	28	4	M6x15	B
H.09.01	19	42	95	115	105	101	28	4	M8x18	B
H.10.01	19	42	95	130	120	101	28	4	M8x18	B
H.11.01	19	42	110	130	120	101	28	4	M8x18	B
H.12.01	24	50	95	115	120	115	33.5	5	M8x18	C
H.13.01	24	50	95	130	120	115	33.5	5	M8x18	C
H.14.01	24	50	110	130	120	115	33.5	5	M8x18	C
H.15.01	24	51	110	165	143	117	35	5	M10x24	C
H.16.01	24	51	130	165	143	117	35	5	M10x24	C
H.16.03	24	51	130	165	140	117	35	5	M10x24	C
H.17.01	24	52	180	215	192	118	36	5	M10x24	C
H.32.02	14	37.4	60	82	95	94	24.2	3.5	M5x12	B

27781410/EN – 03/2022

			P6BG32								
Gear ratio			**16**	**20**	**25**	**28**	**35**	**40**	**50**	**70**	**100**
Short-time duty											
Peak torque	M_{a_pk}	Nm	90	90	90	90	90	90	90	90	70
Peak motor speed	n_{e_pk}	min^{-1}	6000	6000	6000	6000	6000	6000	6000	6000	6000
Peak radial force	$F_{R_a_pk}$	N	4410	4410	4410	4410	4410	4410	4410	4410	4410
Peak axial force	$F_{A_a_pk}$	N	3510	3510	3510	3510	3510	3510	3510	3510	3510
Peak breakdown torque	$M_{K_a_pk}$	Nm	235	235	235	235	235	235	235	235	235
Continuous duty											
Nominal torque	M_{a_N}	Nm	62	62	72	65	72	65	72	72	56
Nominal motor speed	n_{e_N}	min^{-1}	4500	4500	4500	4500	4500	4500	4500	4500	4500
Nominal radial force	$F_{R_a_N}$	N	1700	1830	1970	2040	2200	2300	2480	2780	3130
Nominal axial force	$F_{A_a_N}$	N	2700	2910	2980	2980	2980	2980	2980	2980	2980
Nominal breakdown torque	$M_{K_a_N}$	Nm	131	141	152	158	170	178	192	200	200
General technical data											
Torsional rigidity	c_{tr}	Nm/ arcmin	43	42	41	41	40	36	37	33	23
Rotational clearance	φ	arcmin	≤ 4 (R) – 6 (N)								
Pull-out rigidity	c_{pr}	Nm/ arcmin	177								
Service life	L	h	> 30000								
Cyclic duration factor	ED	%	≤ 100								
Gear unit temperature	T_{max}	°C	90								
Ambient temperature	T_{amb}	°C	-15 – +40								
Nominal ambient temperature	T_{amb_N}	°C	20								
Efficiency	η	%	97	97	97	97	97	97	97	97	97
Sound pressure level	L_P	dB (A)	≤ 55	≤ 55	≤ 55	≤ 55	≤ 55	≤ 55	≤ 55	≤ 55	≤ 55
Degree of protection	–	–	IP65								
No-load speed	M_{e_0}	Nm	0.36	0.24	0.18	0.18	0.16	0.16	0.16	0.15	0.14
Emergency stop torque	M_{a_es}	Nm	250	250	250	250	250	250	250	250	210
Mass moment of inertia incl. adapter											
Coupling Ø 11 mm	J	10^{-4} kgm^2	0.16	0.12	0.12	0.09	0.09	0.08	0.07	0.07	0.07
Coupling Ø 14 mm	J	10^{-4} kgm^2	0.30	0.27	0.26	0.24	0.23	0.22	0.22	0.22	0.21
Coupling Ø 19 mm	J	10^{-4} kgm^2	0.53	0.49	0.49	0.46	0.46	0.45	0.44	0.44	0.44
Mass incl. adapter											
Coupling Ø min – max	m	kg	3.51 – 4.49								

27781410/EN – 03/2022

P6BG32..

57 026 00 19

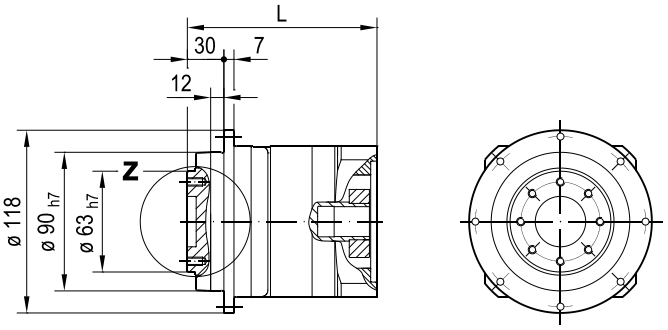

PxBG

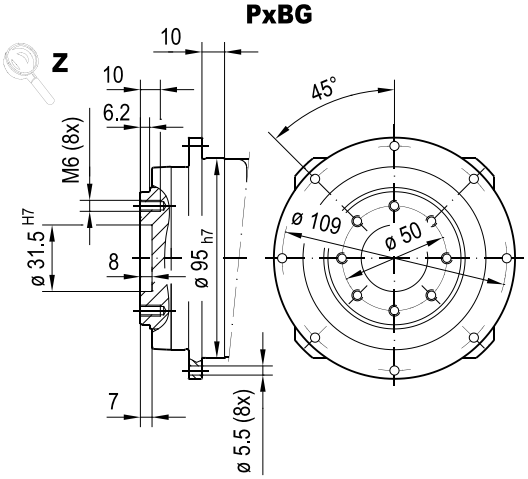

PxCG

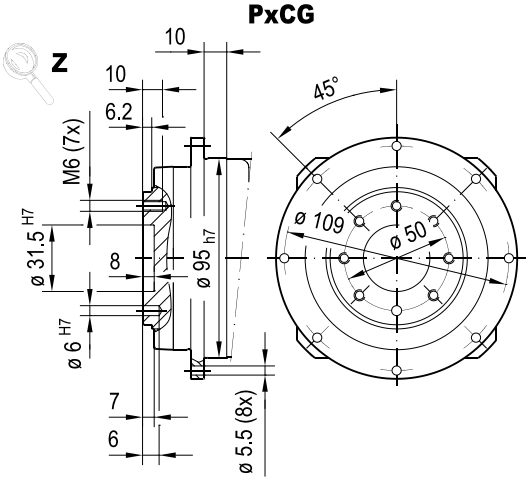

min. □ 73 Fig. A

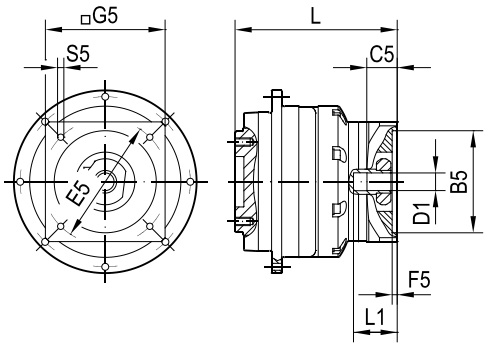

min. □ 95 Fig. B

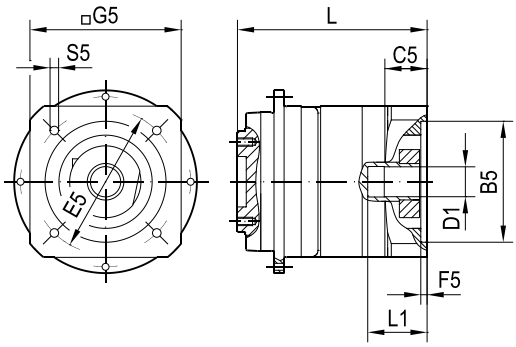

(→ -)	D1	L1	B5	E5	G5	L	C5	F5	S5	Fig.
H.01.02	11	37.6	40	63	73	119	22.3	0	M4x12	A
H.02.03	11	37.6	60	75	73	119	22.3	3.5	M5x12	A
H.03.02	11	37.6	60	90	73	119	22.3	3.5	M5x12	A
H.04.02	14	37.4	50	95	95	122	25.2	3.5	M6x15	A
H.04.03	14	37.4	50	95	95	122	24.2	3.5	M6x15	B
H.05.02	14	37.4	60	75	73	122	25.2	3.5	M6x15	A
H.05.03	14	37.4	60	75	95	122	24.2	3.5	M6x15	B
H.06.03	14	37.4	80	100	95	122	24.2	4	M6x15	B
H.06.05	14	37.4	80	100	88	122	25.2	4	M6x15	A
H.07.01	14	37.4	60	75	73	122	25.2	3.5	M5x12	A
H.07.02	14	37.4	60	75	95	122	24.2	3.5	M5x12	B
H.08.01	19	42	80	100	95	130	28	4	M6x15	B
H.09.01	19	42	95	115	105	130	28	4	M8x18	B
H.10.01	19	42	95	130	120	130	28	4	M8x18	B
H.11.01	19	42	110	130	120	130	28	4	M8x18	B
H.32.01	14	37.4	60	82	73	122	25.2	3.5	M5x12	A
H.32.02	14	37.4	60	82	95	122	24.2	3.5	M5x12	B

27781410/EN – 03/2022

			P6BG33						
Gear ratio			**64**	**80**	**112**	**140**	**160**	**175**	**196**
Short-time duty									
Peak torque	M_{a_pk}	Nm	90	90	90	90	90	90	90
Peak motor speed	n_{e_pk}	min^{-1}	6000	6000	6000	6000	6000	6000	6000
Peak radial force	$F_{R_a_pk}$	N	4410	4410	4410	4410	4410	4410	4410
Peak axial force	$F_{A_a_pk}$	N	3510	3510	3510	3510	3510	3510	3510
Peak breakdown torque	$M_{K_a_pk}$	Nm	235	235	235	235	235	235	235
Continuous duty									
Nominal torque	M_{a_N}	Nm	62	62	62	62	62	72	65
Nominal motor speed	n_{e_N}	min^{-1}	4500	4500	4500	4500	4500	4500	4500
Nominal radial force	$F_{R_a_N}$	N	2700	2900	3250	3500	3660	3740	3740
Nominal axial force	$F_{A_a_N}$	N	2980	2980	2980	2980	2980	2980	2980
Nominal breakdown torque	$M_{K_a_N}$	Nm	200	200	200	200	200	200	200
General technical data									
Torsional rigidity	c_{tr}	Nm/ arcmin	31	34	34	33	36	33	32
Rotational clearance	φ	arcmin	≤ 4 (R) – 6 (N)						
Pull-out rigidity	c_{pr}	Nm/ arcmin	177						
Service life	L	h	> 30000						
Cyclic duration factor	ED	%	≤ 100						
Gear unit temperature	T_{max}	°C	90						
Ambient temperature	T_{amb}	°C	-15 – +40						
Nominal ambient temperature	T_{amb_N}	°C	20						
Efficiency	η	%	93	93	93	93	93	93	93
Sound pressure level	L_P	dB (A)	≤ 56	≤ 56	≤ 56	≤ 56	≤ 56	≤ 56	≤ 56
Degree of protection	–	–	IP65						
No-load speed	M_{e_0}	Nm	0.16	0.14	0.11	0.10	0.09	0.08	0.08
Emergency stop torque	M_{a_es}	Nm	250	250	250	250	250	250	250
Mass moment of inertia incl. adapter									
Coupling Ø 11 mm	J	10^{-4} kgm^2	0.10	0.09	0.07	0.07	0.07	0.07	0.07
Coupling Ø 14 mm	J	10^{-4} kgm^2	0.25	0.23	0.22	0.22	0.21	0.22	0.22
Mass incl. adapter									
Coupling Ø min – max	m	kg	3.98 – 4.35						

27781410/EN – 03/2022

P6BG33..

57 082 00 19

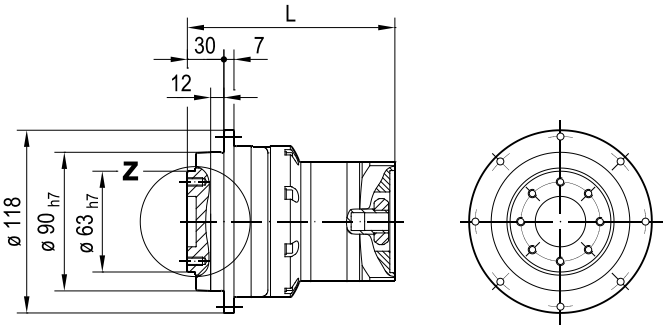

PxBG

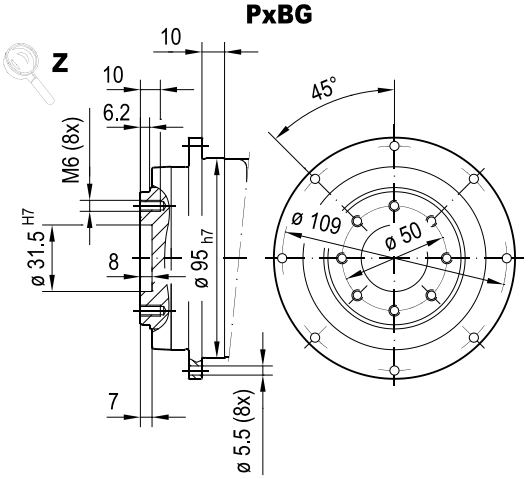

PxCG

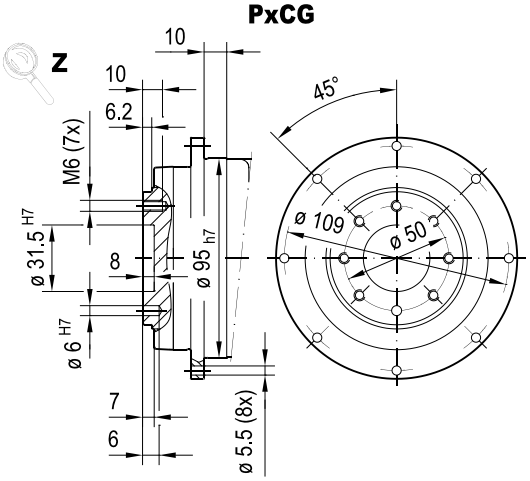

min. □ 55 **Fig. A**

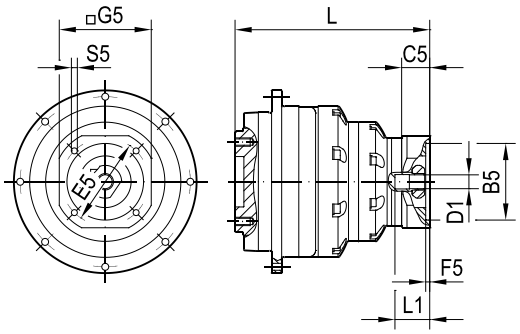

min. □ 73 **Fig. B**

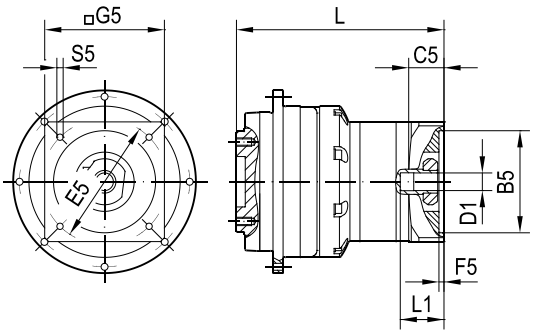

(→ ■ -)	D1	L1	B5	E5	G5	L	C5	F5	S5	Fig.
H.01.03	11	37.6	40	63	55	142	19.7	3.5	M4x12	A
H.02.04	11	37.6	60	75	62	142	19.7	3.5	M5x12	A
H.02.05	11	37.6	60	75	73	142	19.7	3.5	M5x12	A
H.03.03	11	37.6	60	90	73	142	19.7	3.5	M5x12	A
H.04.02	14	37.4	50	95	95	145	25.2	3.5	M6x15	B
H.05.02	14	37.4	60	75	73	145	25.2	3.5	M6x15	B
H.06.02	14	37.4	80	100	95	145	25.2	4	M6x15	B
H.06.05	14	37.4	80	100	88	145	25.2	4	M6x15	B
H.07.01	14	37.4	60	75	73	145	25.2	3.5	M5x12	B
H.32.01	14	37.4	60	82	73	145	25.2	3.5	M5x12	B

27781410/EN – 03/2022

			P6BG33							
Gear ratio			**200**	**245**	**250**	**280**	**350**	**400**	**500**	**700**
Short-time duty										
Peak torque	M_{a_pk}	Nm	90	90	90	90	90	90	90	90
Peak motor speed	n_{e_pk}	min^{-1}	6000	6000	6000	6000	6000	6000	6000	6000
Peak radial force	$F_{R_a_pk}$	N	4410	4410	4410	4410	4410	4410	4410	4410
Peak axial force	$F_{A_a_pk}$	N	3510	3510	3510	3510	3510	3510	3510	3510
Peak breakdown torque	$M_{K_a_pk}$	Nm	235	235	235	235	235	235	235	235
Continuous duty										
Nominal torque	M_{a_N}	Nm	62	72	72	65	72	65	72	72
Nominal motor speed	n_{e_N}	min^{-1}	4500	4500	4500	4500	4500	4500	4500	4500
Nominal radial force	$F_{R_a_N}$	N	3740	3740	3740	3740	3740	3740	3740	3740
Nominal axial force	$F_{A_a_N}$	N	2980	2980	2980	2980	2980	2980	2980	2980
Nominal breakdown torque	$M_{K_a_N}$	Nm	200	200	200	200	200	200	200	200
General technical data										
Torsional rigidity	c_{tr}	Nm/ arcmin	35	35	30	34	32	30	31	30
Rotational clearance	φ	arcmin	≤ 4 (R) – 6 (N)							
Pull-out rigidity	c_{pr}	Nm/ arcmin	177							
Service life	L	h	> 30000							
Cyclic duration factor	ED	%	≤ 100							
Gear unit temperature	T_{max}	°C	90							
Ambient temperature	T_{amb}	°C	-15 – +40							
Nominal ambient temperature	T_{amb_N}	°C	20							
Efficiency	η	%	93	93	93	93	93	93	93	93
Sound pressure level	L_P	dB (A)	≤ 56	≤ 56	≤ 56	≤ 56	≤ 56	≤ 56	≤ 56	≤ 56
Degree of protection	–	–	IP65							
No-load speed	M_{e_0}	Nm	0.08	0.07	0.07	0.06	0.05	0.05	0.04	0.04
Emergency stop torque	M_{a_es}	Nm	250	250	250	250	250	250	250	250
Mass moment of inertia incl. adapter										
Coupling Ø 11 mm	J	10^{-4} kgm^2	0.07	0.07	0.07	0.07	0.07	0.07	0.07	0.07
Coupling Ø 14 mm	J	10^{-4} kgm^2	0.21	0.22	0.21	0.21	0.21	0.21	0.21	0.21
Mass incl. adapter										
Coupling Ø min – max	m	kg	3.98 – 4.35							

27781410/EN – 03/2022

P6BG33..

57 082 00 19

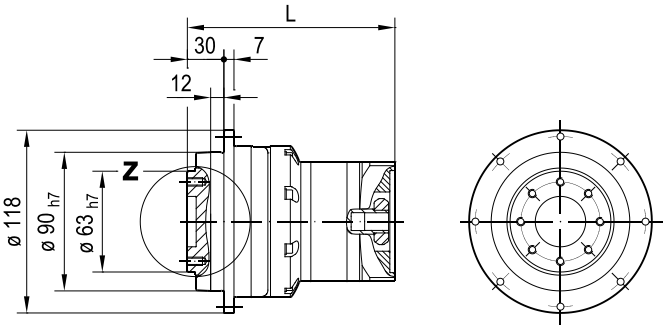

PxBG

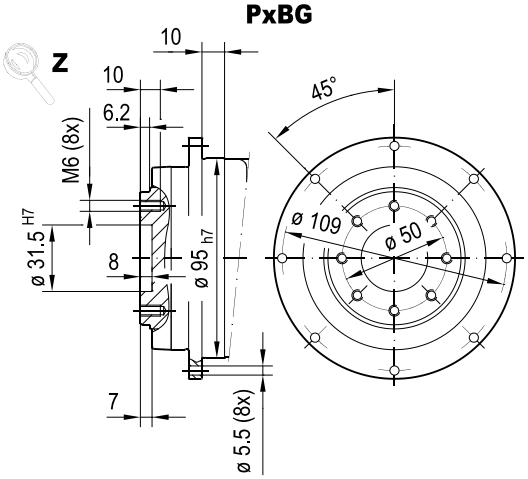

PxCG

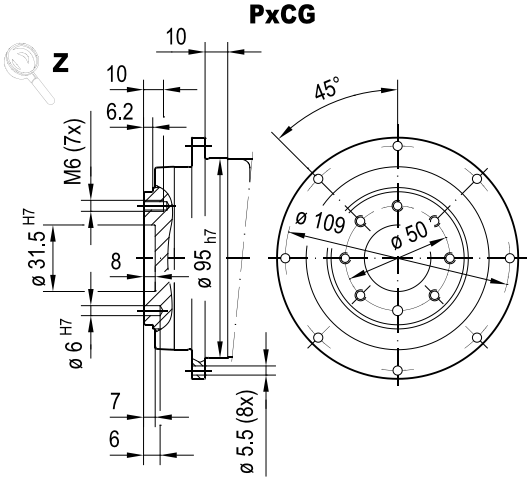

min. □ 55 Fig. A

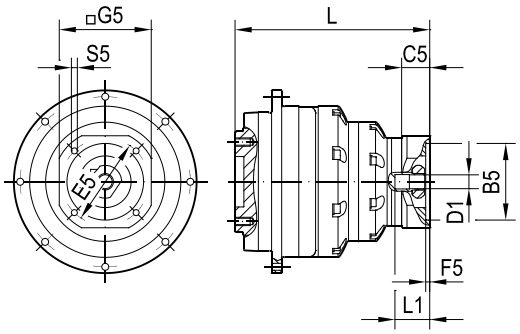

min. □ 73 Fig. B

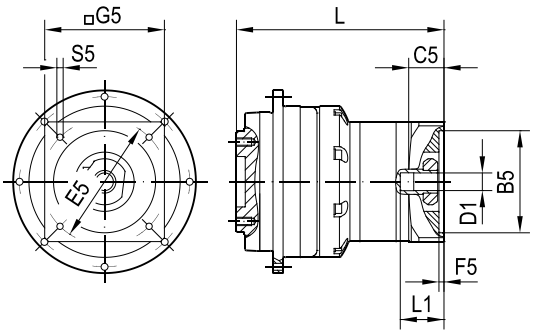

(→ -)	D1	L1	B5	E5	G5	L	C5	F5	S5	Fig.
H.01.03	11	37.6	40	63	55	142	19.7	3.5	M4x12	A
H.02.04	11	37.6	60	75	62	142	19.7	3.5	M5x12	A
H.02.05	11	37.6	60	75	73	142	19.7	3.5	M5x12	A
H.03.03	11	37.6	60	90	73	142	19.7	3.5	M5x12	A
H.04.02	14	37.4	50	95	95	145	25.2	3.5	M6x15	B
H.05.02	14	37.4	60	75	73	145	25.2	3.5	M6x15	B
H.06.02	14	37.4	80	100	95	145	25.2	4	M6x15	B
H.06.05	14	37.4	80	100	88	145	25.2	4	M6x15	B
H.07.01	14	37.4	60	75	73	145	25.2	3.5	M5x12	B
H.32.01	14	37.4	60	82	73	145	25.2	3.5	M5x12	B

27781410/EN – 03/2022

			P6BG41			
Gear ratio			**4**	**5**	**7**	**10**
Short-time duty						
Peak torque	M_{a_pk}	Nm	240	240	240	180
Peak motor speed	n_{e_pk}	min^{-1}	6000	6000	6000	6000
Peak radial force	$F_{R_a_pk}$	N	1050	1050	1050	1050
Peak axial force	$F_{A_a_pk}$	N	2100	2100	2100	2100
Peak breakdown torque	$M_{K_a_pk}$	Nm	72	72	72	72
Continuous duty						
Nominal torque	M_{a_N}	Nm	95	91	93	97
Nominal motor speed	n_{e_N}	min^{-1}	4000	4500	4500	4500
Nominal radial force	$F_{R_a_N}$	N	890	890	890	890
Nominal axial force	$F_{A_a_N}$	N	1780	1780	1780	1780
Nominal breakdown torque	$M_{K_a_N}$	Nm	61	61	61	61
General technical data						
Torsional rigidity	c_{tr}	Nm/ arcmin	97	84	65	48
Rotational clearance	φ	arcmin	≤ 2 (R) – 4 (N)			
Pull-out rigidity	c_{pr}	Nm/ arcmin	319			
Service life	L	h	> 30000			
Cyclic duration factor	ED	%	≤ 100			
Gear unit temperature	T_{max}	°C	90			
Ambient temperature	T_{amb}	°C	-15 – +40			
Nominal ambient temperature	T_{amb_N}	°C	20			
Efficiency	η	%	99	99	99	99
Sound pressure level	L_P	dB (A)	≤ 58	≤ 58	≤ 58	≤ 58
Degree of protection	–	–	IP65			
No-load speed	M_{e_0}	Nm	0.80	0.60	0.50	0.40
Emergency stop torque	M_{a_es}	Nm	625	625	625	570
Mass moment of inertia incl. adapter						
Coupling Ø 19 mm	J	10^{-4} kgm^2	1.88	1.38	0.91	0.67
Coupling Ø 24 mm	J	10^{-4} kgm^2	3.15	2.65	2.18	1.94
Coupling Ø 28 mm	J	10^{-4} kgm^2	3.70	3.20	2.74	2.49
Coupling Ø 32 mm	J	10^{-4} kgm^2	5.97	5.48	5.02	4.78
Coupling Ø 38 mm	J	10^{-4} kgm^2	8.90	8.40	7.95	7.70
Mass incl. adapter						
Coupling Ø min – max	m	kg	5.30 – 12.62			

27781410/EN – 03/2022

P6BG41..

57 027 00 19

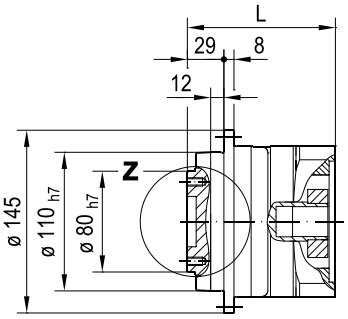

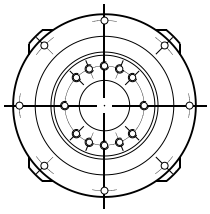

PxBG

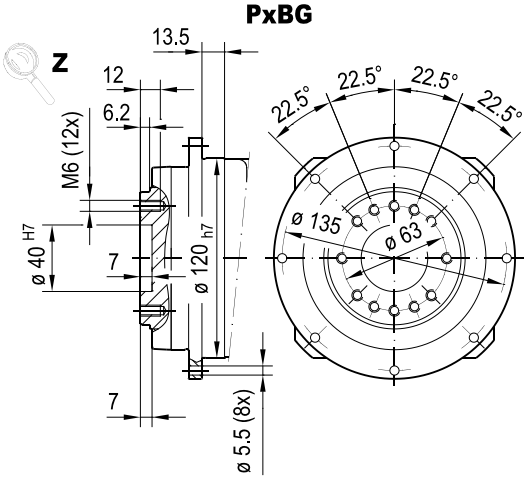

PxCG

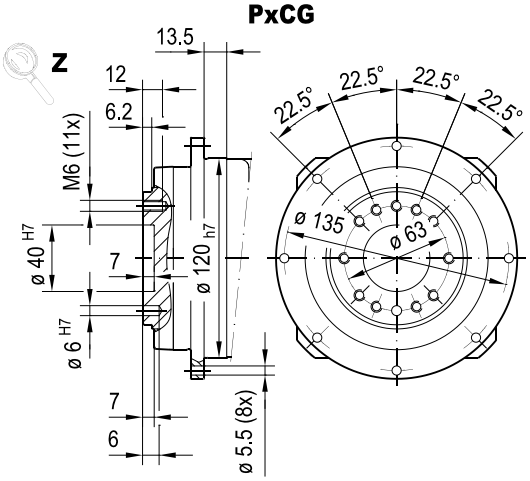

min. □ 120 Fig. B

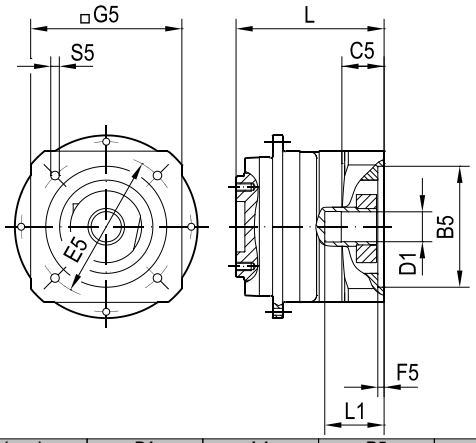

min. □ 152 Fig. C

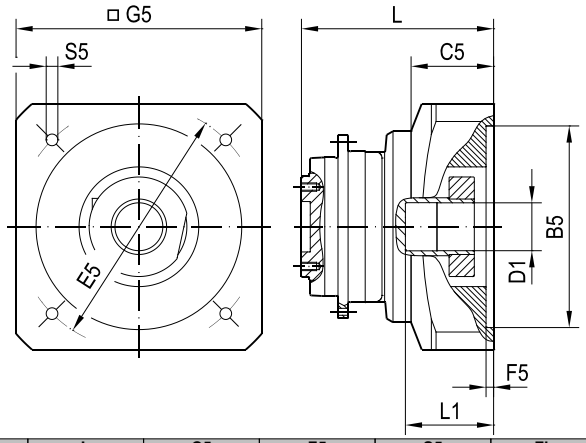

(→)	D1	L1	B5	E5	G5	L	C5	F5	S5	Fig.
H.08.02	19	41	80	100	120	102	27	4	M6x15	B
H.09.02	19	42	95	115	120	103	28	4	M8x18	B
H.10.02	19	42	95	130	120	103	28	4	M8x18	B
H.11.02	19	42	110	130	120	103	28	4	M8x18	B
H.12.01	24	50	95	115	120	118	33.5	5	M8x18	B
H.13.01	24	50	95	130	120	118	33.5	5	M8x18	B
H.14.01	24	50	110	130	120	118	33.5	5	M8x18	B
H.15.01	24	51	110	165	143	119	35	5	M10x24	B
H.16.01	24	51	130	165	143	119	35	5	M10x24	B
H.16.03	24	51	130	165	140	119	35	5	M10x24	B
H.17.01	24	52	180	215	192	120	36	5	M10x24	B
H.18.01	28	60	130	165	143	126	45.5	5	M10x24	B
H.18.02	28	60	130	165	138	126	45.5	5	M10x24	B
H.19.01	28	60	180	215	192	126	45.5	5	M12x28	B
H.19.02	28	60	180	215	215	126	45.5	5	M12x28	B
H.20.01	32	65	130	165	152	130	43	5	M10x24	C
H.21.01	32	65	130	215	192	130	43	5	M12x28	C
H.22.01	32	62	155	190	163	127	40	5	M10x24	C
H.23.01	32	65	180	215	190	130	43	5	M12x28	C
H.23.02	32	65	180	215	215	130	43	5	M12x28	C
H.24.01	38	80	114.3	200	180	146	58.5	5	M12x28	C
H.25.01	38	80	180	215	192	146	58.5	5	M12x28	C
H.25.02	38	80	180	215	215	146	58.5	5	M12x28	C
H.25.04	38	80	180	215	190	146	58.5	5	M12x28	C
H.26.01	38	80	230	265	240	146	58.5	5	M12x28	C

27781410/EN – 03/2022

			P6BG42								
Gear ratio			**16**	**20**	**25**	**28**	**35**	**40**	**50**	**70**	**100**
Short-time duty											
Peak torque	M_{a_pk}	Nm	240	240	240	240	240	240	240	240	180
Peak motor speed	n_{e_pk}	min^{-1}	6000	6000	6000	6000	6000	6000	6000	6000	6000
Peak radial force	$F_{R_a_pk}$	N	6930	6930	6930	6930	6930	6930	6930	6930	6930
Peak axial force	$F_{A_a_pk}$	N	5930	5930	5930	5930	5930	5930	5930	5930	5930
Peak breakdown torque	$M_{K_a_pk}$	Nm	485	485	485	485	485	485	485	485	485
Continuous duty											
Nominal torque	M_{a_N}	Nm	138	148	149	164	164	183	182	189	144
Nominal motor speed	n_{e_N}	min^{-1}	4500	4500	4500	4500	4500	4500	4500	4500	4500
Nominal radial force	$F_{R_a_N}$	N	2490	2680	2890	3000	3230	3380	3640	4070	4580
Nominal axial force	$F_{A_a_N}$	N	3630	3910	4210	4370	4710	4920	5040	5040	5040
Nominal breakdown torque	$M_{K_a_N}$	Nm	215	230	250	260	280	295	315	355	400
General technical data											
Torsional rigidity	c_{tr}	Nm/ arcmin	96	95	86	91	83	85	80	67	52
Rotational clearance	φ	arcmin	≤ 3 (R) – 5 (N)								
Pull-out rigidity	c_{pr}	Nm/ arcmin	319								
Service life	L	h	> 30000								
Cyclic duration factor	ED	%	≤ 100								
Gear unit temperature	T_{max}	°C	90								
Ambient temperature	T_{amb}	°C	-15 – +40								
Nominal ambient temperature	T_{amb_N}	°C	20								
Efficiency	η	%	97	97	97	97	97	97	97	97	97
Sound pressure level	L_P	dB (A)	≤ 56	≤ 56	≤ 56	≤ 56	≤ 56	≤ 56	≤ 56	≤ 56	≤ 56
Degree of protection	–	–	IP65								
No-load speed	M_{e_0}	Nm	0.52	0.53	0.48	0.43	0.28	0.40	0.25	0.20	0.19
Emergency stop torque	M_{a_es}	Nm	625	625	625	625	625	625	625	625	575
Mass moment of inertia incl. adapter											
Coupling Ø 14 mm	J	10^{-4} kgm^2	0.57	0.44	0.42	0.33	0.32	0.26	0.26	0.25	0.25
Coupling Ø 19 mm	J	10^{-4} kgm^2	0.80	0.67	0.65	0.55	0.54	0.49	0.49	0.48	0.48
Coupling Ø 24 mm	J	10^{-4} kgm^2	2.07	1.94	1.92	1.82	1.81	1.76	1.76	1.75	1.75
Coupling Ø 28 mm	J	10^{-4} kgm^2	2.62	2.49	2.47	2.38	2.37	2.32	2.31	2.31	2.30
Mass incl. adapter											
Coupling Ø min – max	m	kg	5.95 – 10.75								

27781410/EN – 03/2022

P6BG42..

57 028 00 19

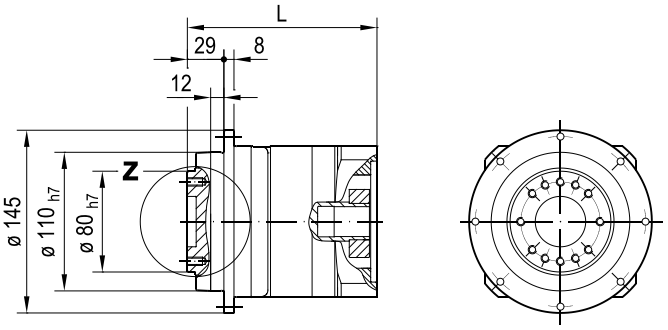

PxBG

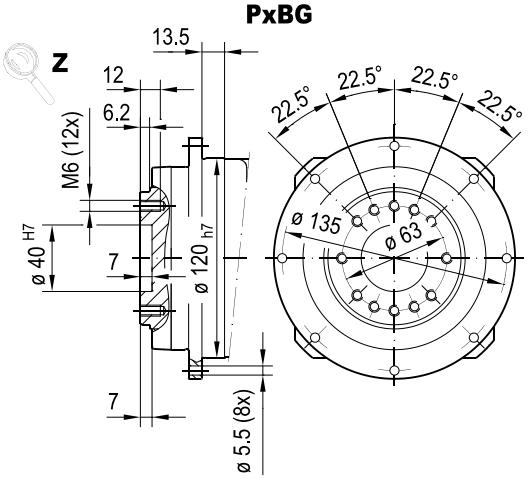

PxCG

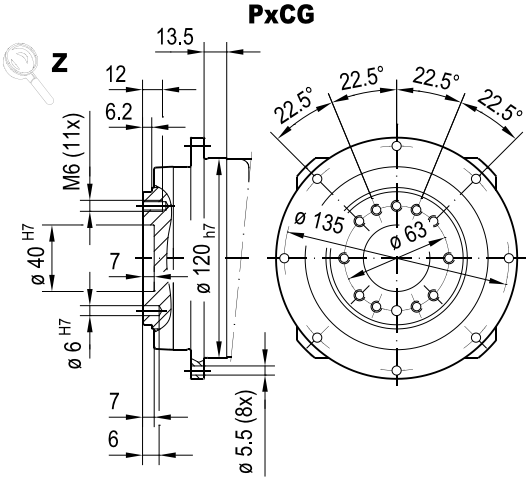

min. □ 95 Fig. A

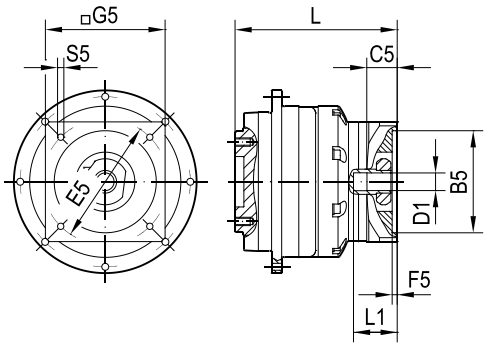

min. □ 120 Fig. B

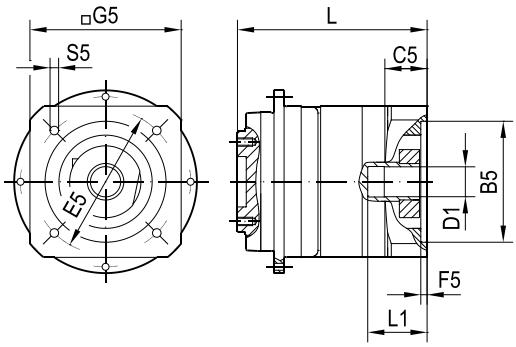

(→ ■ -)	D1	L1	B5	E5	G5	L	C5	F5	S5	Fig.
H.04.03	14	37.4	50	95	95	129	24.2	3.5	M6x15	A
H.05.03	14	37.4	60	75	95	129	24.2	3.5	M6x15	A
H.06.03	14	37.4	80	100	95	129	24.2	4	M6x15	A
H.07.02	14	37.4	60	75	95	129	24.2	3.5	M5x12	A
H.08.01	19	42	80	100	95	136	28	4	M6x15	A
H.08.02	19	41	80	100	120	135	27	4	M6x15	B
H.09.01	19	42	95	115	105	136	28	4	M8x18	A
H.09.02	19	42	95	115	120	136	28	4	M8x18	B
H.10.02	19	42	95	130	120	136	28	4	M8x18	B
H.11.02	19	42	110	130	120	136	28	4	M8x18	B
H.12.01	24	50	95	115	120	151	33.5	5	M8x18	B
H.13.01	24	50	95	130	120	151	33.5	5	M8x18	B
H.14.01	24	50	110	130	120	151	33.5	5	M8x18	B
H.15.01	24	51	110	165	143	152	35	5	M10x24	B
H.16.01	24	51	130	165	143	152	35	5	M10x24	B
H.16.03	24	51	130	165	140	152	35	5	M10x24	B
H.17.01	24	52	180	215	192	153	36	5	M10x24	B
H.18.01	28	60	130	165	143	159	45.5	5	M10x24	B
H.18.02	28	60	130	165	138	159	45.5	5	M10x24	B
H.19.01	28	60	180	215	192	159	45.5	5	M12x28	B
H.19.02	28	60	180	215	215	159	45.5	5	M12x28	B
H.32.02	14	37.4	60	82	95	129	24.2	3.5	M5x12	A

27781410/EN – 03/2022

			P6BG43							
Gear ratio			**64**	**80**	**112**	**125**	**140**	**160**	**175**	**196**
Short-time duty										
Peak torque	M_{a_pk}	Nm	240	240	240	240	240	240	240	240
Peak motor speed	n_{e_pk}	min^{-1}	6000	6000	6000	6000	6000	6000	6000	6000
Peak radial force	$F_{R_a_pk}$	N	6930	6930	6930	6930	6930	6930	6930	6930
Peak axial force	$F_{A_a_pk}$	N	5930	5930	5930	5930	5930	5930	5930	5930
Peak breakdown torque	$M_{K_a_pk}$	Nm	485	485	485	485	485	485	485	485
Continuous duty										
Nominal torque	M_{a_N}	Nm	138	138	138	149	148	138	149	164
Nominal motor speed	n_{e_N}	min^{-1}	4500	4500	4500	4500	4500	4500	4500	4500
Nominal radial force	$F_{R_a_N}$	N	3950	4260	4760	4940	5130	5360	5530	5740
Nominal axial force	$F_{A_a_N}$	N	5040	5040	5040	5040	5040	5040	5040	5040
Nominal breakdown torque	$M_{K_a_N}$	Nm	345	370	410	410	410	410	410	410
General technical data										
Torsional rigidity	c_{tr}	Nm/ arcmin	81	86	81	78	81	84	79	79
Rotational clearance	φ	arcmin	≤ 3 (R) – 5 (N)							
Pull-out rigidity	c_{pr}	Nm/ arcmin	319							
Service life	L	h	> 30000							
Cyclic duration factor	ED	%	≤ 100							
Gear unit temperature	T_{max}	°C	90							
Ambient temperature	T_{amb}	°C	-15 – +40							
Nominal ambient temperature	T_{amb_N}	°C	20							
Efficiency	η	%	93	93	93	93	93	93	93	93
Sound pressure level	L_P	dB (A)	≤ 56	≤ 56	≤ 56	≤ 56	≤ 56	≤ 56	≤ 56	≤ 56
Degree of protection	–	–	IP65							
No-load speed	M_{e_0}	Nm	0.28	0.24	0.19	0.17	0.16	0.15	0.14	0.13
Emergency stop torque	M_{a_es}	Nm	625	625	625	625	625	625	625	625
Mass moment of inertia incl. adapter										
Coupling Ø 11 mm	J	10^{-4} kgm^2	0.15	0.12	0.09	0.11	0.09	0.08	0.09	0.09
Coupling Ø 14 mm	J	10^{-4} kgm^2	0.30	0.26	0.23	0.26	0.23	0.22	0.23	0.23
Coupling Ø 19 mm	J	10^{-4} kgm^2	0.52	0.49	0.46	0.48	0.46	0.45	0.46	0.46
Mass incl. adapter										
Coupling Ø min – max	m	kg	6.30 – 7.30							

27781410/EN – 03/2022

P6BG43..

57 083 00 19

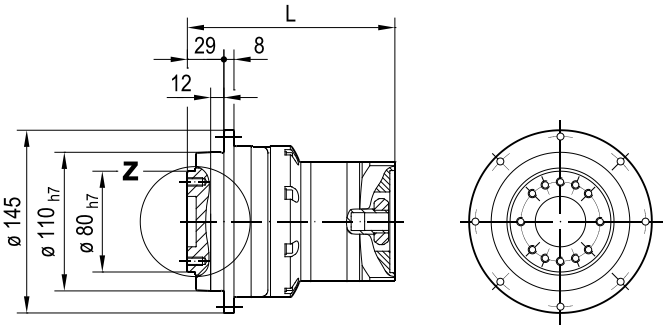

PxBG

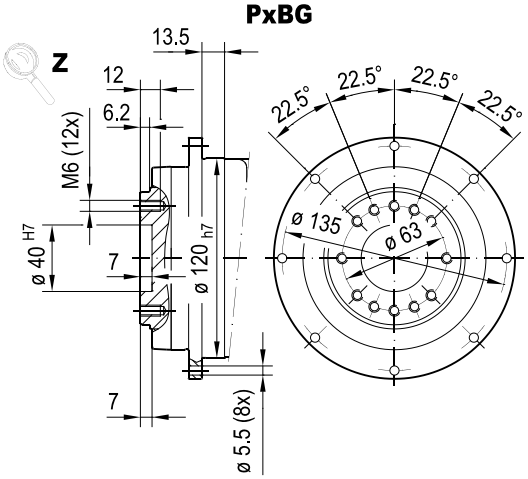

PxCG

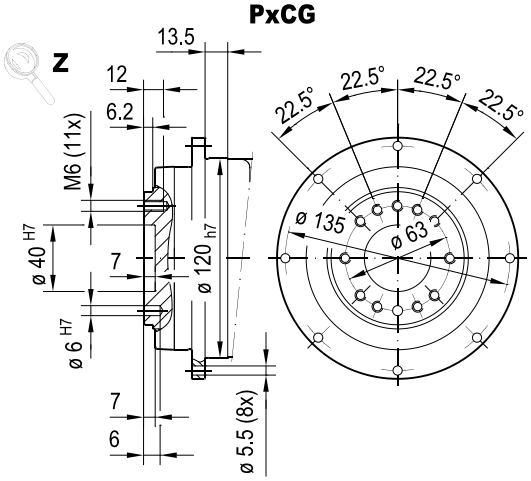

min. □ 73 Fig. A

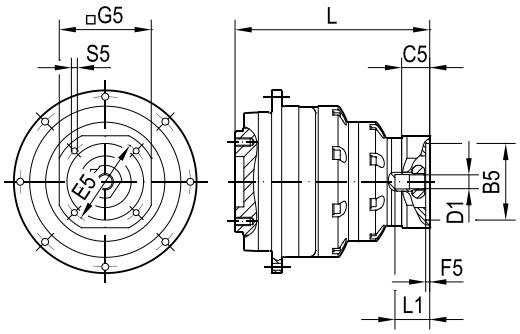

min. □ 95 Fig. B

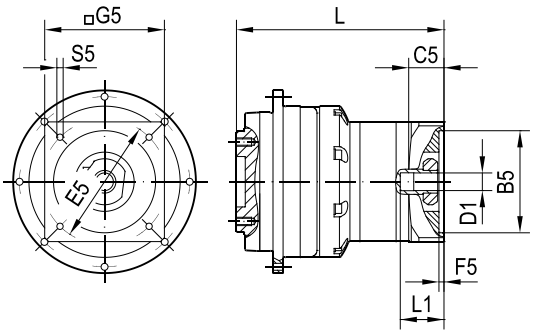

(→ ■ -)	D1	L1	B5	E5	G5	L	C5	F5	S5	Fig.
H.01.02	11	37.6	40	63	73	155	22.3	0	M4x12	A
H.02.03	11	37.6	60	75	73	155	22.3	3.5	M5x12	A
H.03.02	11	37.6	60	90	73	155	22.3	3.5	M5x12	A
H.04.02	14	37.4	50	95	95	158	25.2	3.5	M6x15	A
H.04.03	14	37.4	50	95	95	158	24.2	3.5	M6x15	B
H.05.02	14	37.4	60	75	73	158	25.2	3.5	M6x15	A
H.05.03	14	37.4	60	75	95	158	24.2	3.5	M6x15	B
H.06.03	14	37.4	80	100	95	158	24.2	4	M6x15	B
H.06.05	14	37.4	80	100	88	158	25.2	4	M6x15	A
H.07.01	14	37.4	60	75	73	158	25.2	3.5	M5x12	A
H.07.02	14	37.4	60	75	95	158	24.2	3.5	M5x12	B
H.08.01	19	42	80	100	95	165	28	4	M6x15	B
H.09.01	19	42	95	115	105	165	28	4	M8x18	B
H.10.01	19	42	95	130	120	165	28	4	M8x18	B
H.11.01	19	42	110	130	120	165	28	4	M8x18	B
H.32.01	14	37.4	60	82	73	158	25.2	3.5	M5x12	A
H.32.02	14	37.4	60	82	95	158	24.2	3.5	M5x12	B

27781410/EN – 03/2022

			P6BG43							
Gear ratio			**200**	**245**	**250**	**280**	**350**	**400**	**500**	**700**
Short-time duty										
Peak torque	M_{a_pk}	Nm	240	240	240	240	240	240	240	240
Peak motor speed	n_{e_pk}	min^{-1}	6000	6000	6000	6000	6000	6000	6000	6000
Peak radial force	$F_{R_a_pk}$	N	6930	6930	6930	6930	6930	6930	6930	6930
Peak axial force	$F_{A_a_pk}$	N	5930	5930	5930	5930	5930	5930	5930	5930
Peak breakdown torque	$M_{K_a_pk}$	Nm	485	485	485	485	485	485	485	485
Continuous duty										
Nominal torque	M_{a_N}	Nm	148	164	149	164	164	183	182	189
Nominal motor speed	n_{e_N}	min^{-1}	4500	4500	4500	4500	4500	4500	4500	4500
Nominal radial force	$F_{R_a_N}$	N	5780	5890	5890	5890	5890	5890	5890	5890
Nominal axial force	$F_{A_a_N}$	N	5040	5040	5040	5040	5040	5040	5040	5040
Nominal breakdown torque	$M_{K_a_N}$	Nm	410	410	410	410	410	410	410	410
General technical data										
Torsional rigidity	c_{tr}	Nm/ arcmin	84	77	75	83	74	76	75	62
Rotational clearance	φ	arcmin	≤ 3 (R) – 5 (N)							
Pull-out rigidity	c_{pr}	Nm/ arcmin	319							
Service life	L	h	> 30000							
Cyclic duration factor	ED	%	≤ 100							
Gear unit temperature	T_{max}	°C	90							
Ambient temperature	T_{amb}	°C	-15 – +40							
Nominal ambient temperature	T_{amb_N}	°C	20							
Efficiency	η	%	93	93	93	93	93	93	93	93
Sound pressure level	L_P	dB (A)	≤ 56	≤ 56	≤ 56	≤ 56	≤ 56	≤ 56	≤ 56	≤ 56
Degree of protection	–	–	IP65							
No-load speed	M_{e_0}	Nm	0.13	0.11	0.11	0.10	0.09	0.08	0.07	0.05
Emergency stop torque	M_{a_es}	Nm	625	625	625	625	625	625	625	625
Mass moment of inertia incl. adapter										
Coupling Ø 11 mm	J	10^{-4} kgm^2	0.07	0.09	0.07	0.07	0.07	0.07	0.07	0.07
Coupling Ø 14 mm	J	10^{-4} kgm^2	0.22	0.23	0.22	0.22	0.22	0.21	0.21	0.21
Coupling Ø 19 mm	J	10^{-4} kgm^2	0.44	0.46	0.44	0.44	0.44	0.44	0.44	0.44
Mass incl. adapter										
Coupling Ø min – max	m	kg	6.30 – 7.30							

27781410/EN – 03/2022

P6BG43..

57 083 00 19

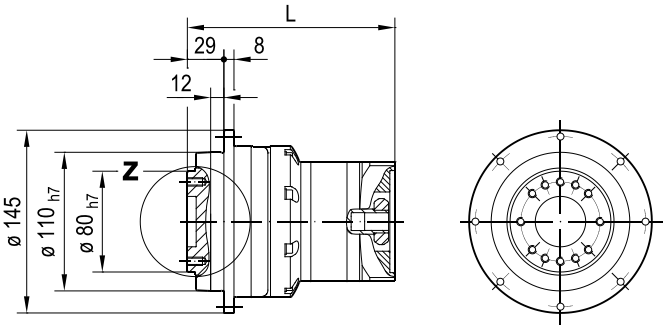

PxBG

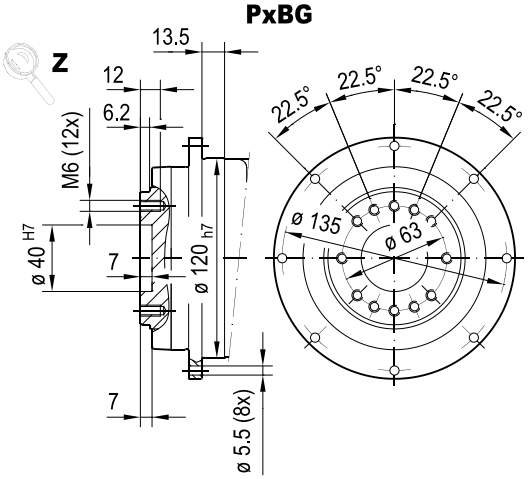

PxCG

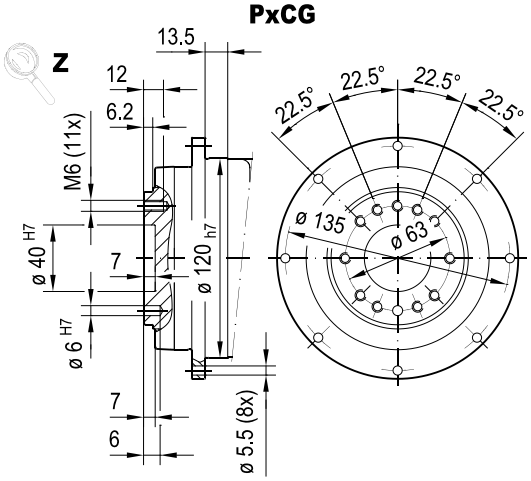

min. □ 73 Fig. A

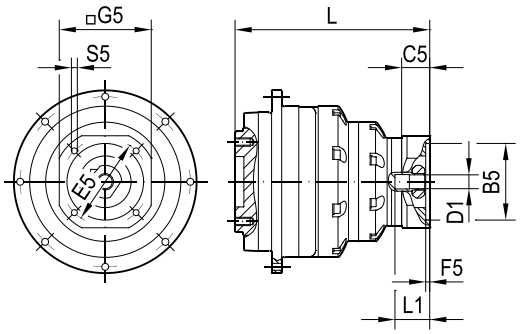

min. □ 95 Fig. B

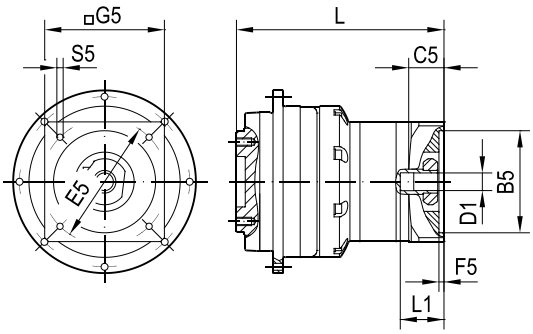

(→ 🕮 -)	D1	L1	B5	E5	G5	L	C5	F5	S5	Fig.
H.01.02	11	37.6	40	63	73	155	22.3	0	M4x12	A
H.02.03	11	37.6	60	75	73	155	22.3	3.5	M5x12	A
H.03.02	11	37.6	60	90	73	155	22.3	3.5	M5x12	A
H.04.02	14	37.4	50	95	95	158	25.2	3.5	M6x15	A
H.04.03	14	37.4	50	95	95	158	24.2	3.5	M6x15	B
H.05.02	14	37.4	60	75	73	158	25.2	3.5	M6x15	A
H.05.03	14	37.4	60	75	95	158	24.2	3.5	M6x15	B
H.06.03	14	37.4	80	100	95	158	24.2	4	M6x15	B
H.06.05	14	37.4	80	100	88	158	25.2	4	M6x15	A
H.07.01	14	37.4	60	75	73	158	25.2	3.5	M5x12	A
H.07.02	14	37.4	60	75	95	158	24.2	3.5	M5x12	B
H.08.01	19	42	80	100	95	165	28	4	M6x15	B
H.09.01	19	42	95	115	105	165	28	4	M8x18	B
H.10.01	19	42	95	130	120	165	28	4	M8x18	B
H.11.01	19	42	110	130	120	165	28	4	M8x18	B
H.32.01	14	37.4	60	82	73	158	25.2	3.5	M5x12	A
H.32.02	14	37.4	60	82	95	158	24.2	3.5	M5x12	B

27781410/EN – 03/2022

			P6BG51			
Gear ratio			**4**	**5**	**7**	**10**
Short-time duty						
Peak torque	M_{a_pk}	Nm	480	480	480	380
Peak motor speed	n_{e_pk}	min^{-1}	6000	6000	6000	6000
Peak radial force	$F_{R_a_pk}$	N	1260	1260	1260	1260
Peak axial force	$F_{A_a_pk}$	N	3150	3150	3150	3150
Peak breakdown torque	$M_{K_a_pk}$	Nm	110	110	110	110
Continuous duty						
Nominal torque	M_{a_N}	Nm	195	182	187	195
Nominal motor speed	n_{e_N}	min^{-1}	3500	4500	4500	4500
Nominal radial force	$F_{R_a_N}$	N	1070	1070	1070	1070
Nominal axial force	$F_{A_a_N}$	N	2670	2670	2670	2670
Nominal breakdown torque	$M_{K_a_N}$	Nm	93	93	93	93
General technical data						
Torsional rigidity	c_{tr}	Nm/ arcmin	195	184	142	103
Rotational clearance	φ	arcmin	≤ 2 (R) – 4 (N)			
Pull-out rigidity	c_{pr}	Nm/ arcmin	713			
Service life	L	h	> 30000			
Cyclic duration factor	ED	%	≤ 100			
Gear unit temperature	T_{max}	°C	90			
Ambient temperature	T_{amb}	°C	-15 – +40			
Nominal ambient temperature	T_{amb_N}	°C	20			
Efficiency	η	%	99	99	99	99
Sound pressure level	L_P	dB (A)	≤ 59	≤ 59	≤ 59	≤ 59
Degree of protection	–	–	IP65			
No-load speed	M_{e_0}	Nm	1.50	1.20	1.00	0.90
Emergency stop torque	M_{a_es}	Nm	1350	1350	1350	1140
Mass moment of inertia incl. adapter						
Coupling Ø 24 mm	J	10^{-4} kgm^2	7.15	5.24	3.53	2.60
Coupling Ø 32 mm	J	10^{-4} kgm^2	10.02	8.12	6.36	5.44
Coupling Ø 38 mm	J	10^{-4} kgm^2	12.95	11.04	9.29	8.36
Coupling Ø 48 mm	J	10^{-4} kgm^2	26.88	24.97	23.26	22.34
Mass incl. adapter						
Coupling Ø min – max	m	kg	12.35 – 23.77			

27781410/EN – 03/2022

P6BG51..

57 029 00 19

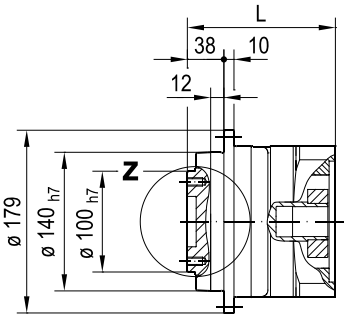

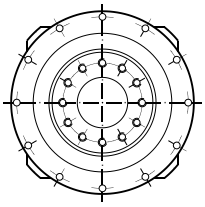

PxBG

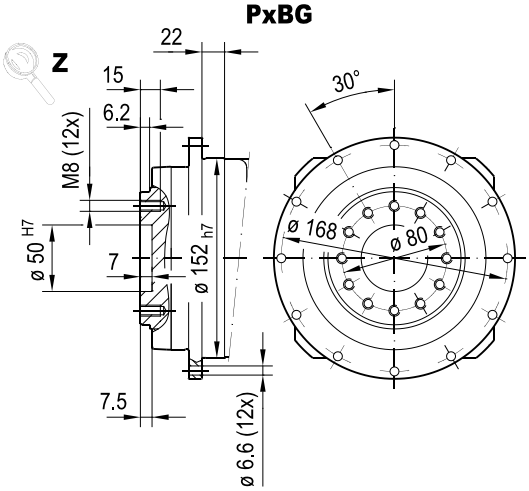

PxCG

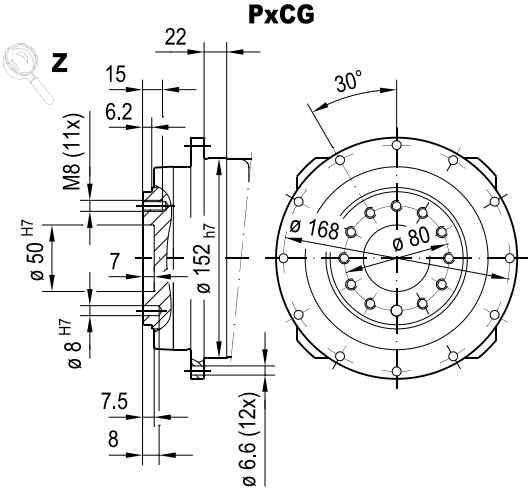

min. □ 152 Fig. B

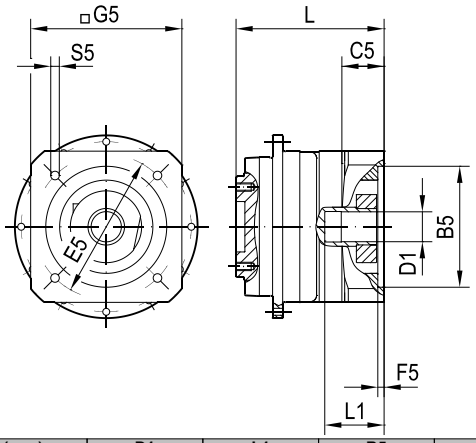

min. □ 215 Fig. C

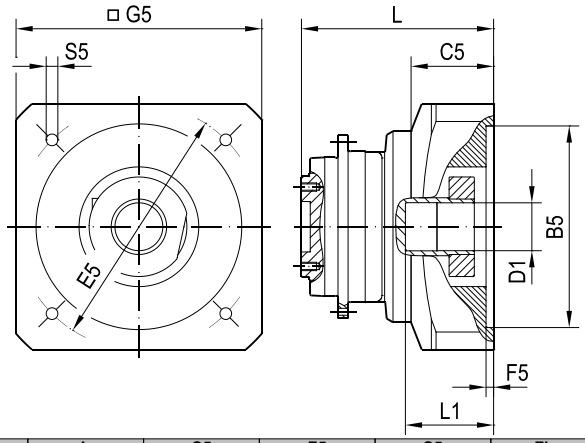

(→ ■ -)	D1	L1	B5	E5	G5	L	C5	F5	S5	Fig.
H.12.02	24	50	95	115	152	132	34.5	5	M8x18	B
H.13.02	24	50	95	130	152	132	34.5	5	M8x18	B
H.14.02	24	50	110	130	152	132	34.5	5	M8x18	B
H.15.02	24	50	110	165	152	133	35	5	M10x24	B
H.16.02	24	50	130	165	152	133	35	5	M10x24	B
H.17.02	24	50	180	215	192	133	35	5	M10x24	B
H.20.01	32	65	130	165	152	145	43	5	M10x24	B
H.21.01	32	65	130	215	192	145	43	5	M12x28	B
H.22.01	32	62	155	190	163	142	40	5	M10x24	B
H.23.01	32	65	180	215	190	145	43	5	M12x28	B
H.23.02	32	65	180	215	215	145	43	5	M12x28	B
H.24.01	38	80	114.3	200	180	160	58.5	5	M12x28	B
H.25.01	38	80	180	215	192	160	58.5	5	M12x28	B
H.25.02	38	80	180	215	215	160	58.5	5	M12x28	B
H.25.04	38	80	180	215	190	160	58.5	5	M12x28	B
H.26.01	38	80	230	265	240	160	58.5	5	M12x28	B
H.27.01	48	85	180	215	215	172	54.5	7	M12x28	C
H.28.01	48	110	230	265	240	197	79.5	7	M12x28	C
H.30.01	48	82	250	300	262	169	51.5	7	M16x36	C

27781410/EN – 03/2022

			P6BG52								
Gear ratio			**16**	**20**	**25**	**28**	**35**	**40**	**50**	**70**	**100**
Short-time duty											
Peak torque	M_{a_pk}	Nm	480	480	480	480	480	480	480	480	380
Peak motor speed	n_{e_pk}	min^{-1}	6000	6000	6000	6000	6000	6000	6000	6000	6000
Peak radial force	$F_{R_a_pk}$	N	10300	10300	10300	10300	10300	10300	10300	10300	10300
Peak axial force	$F_{A_a_pk}$	N	10300	10300	10300	10300	10300	10300	10300	10300	10300
Peak breakdown torque	$M_{K_a_pk}$	Nm	950	950	950	950	950	950	950	950	950
Continuous duty											
Nominal torque	M_{a_N}	Nm	275	295	295	325	325	360	365	300	300
Nominal motor speed	n_{e_N}	min^{-1}	4500	4500	4500	4500	4500	4500	4500	4500	4500
Nominal radial force	$F_{R_a_N}$	N	3330	3580	3860	4010	4320	4520	4870	5440	6130
Nominal axial force	$F_{A_a_N}$	N	5040	5430	5840	6070	6540	6840	7360	8240	8800
Nominal breakdown torque	$M_{K_a_N}$	Nm	375	405	435	450	485	510	550	615	690
General technical data											
Torsional rigidity	c_{tr}	Nm/ arcmin	217	213	198	204	194	192	186	159	117
Rotational clearance	φ	arcmin	≤ 3 (R) – 5 (N)								
Pull-out rigidity	c_{pr}	Nm/ arcmin	713								
Service life	L	h	> 30000								
Cyclic duration factor	ED	%	≤ 100								
Gear unit temperature	T_{max}	°C	90								
Ambient temperature	T_{amb}	°C	-15 – +40								
Nominal ambient temperature	T_{amb_N}	°C	20								
Efficiency	η	%	97	97	97	97	97	97	97	97	97
Sound pressure level	L_P	dB (A)	≤ 59	≤ 59	≤ 59	≤ 59	≤ 59	≤ 59	≤ 59	≤ 59	≤ 59
Degree of protection	–	–	IP65								
No-load speed	M_{e_0}	Nm	1.10	1.00	0.96	0.80	0.60	0.55	0.45	0.40	0.40
Emergency stop torque	M_{a_es}	Nm	1350	1350	1350	1350	1350	1350	1350	1350	1140
Mass moment of inertia incl. adapter											
Coupling Ø 19 mm	J	10^{-4} kgm^2	1.85	1.36	1.29	0.90	0.86	0.66	0.64	0.63	0.62
Coupling Ø 24 mm	J	10^{-4} kgm^2	3.11	2.63	2.55	2.17	2.13	1.93	1.91	1.90	1.89
Coupling Ø 28 mm	J	10^{-4} kgm^2	3.67	3.18	3.11	2.72	2.69	2.49	2.47	2.45	2.44
Coupling Ø 32 mm	J	10^{-4} kgm^2	5.94	5.46	5.38	5.01	4.97	4.77	4.76	4.74	4.73
Coupling Ø 38 mm	J	10^{-4} kgm^2	8.87	8.38	8.31	7.94	7.90	7.70	7.68	7.66	7.65
Mass incl. adapter											
Coupling Ø min – max	m	kg	12.82 – 20.49								

27781410/EN – 03/2022

P6BG52..

57 030 00 19

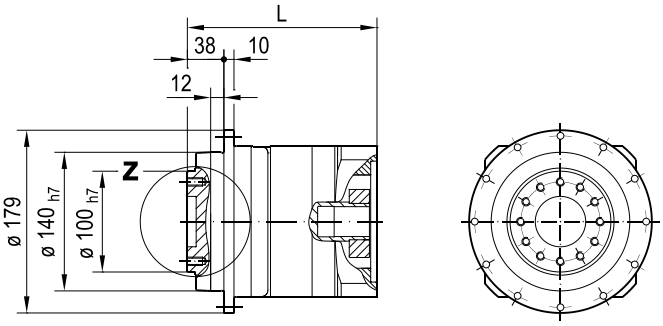

PxBG

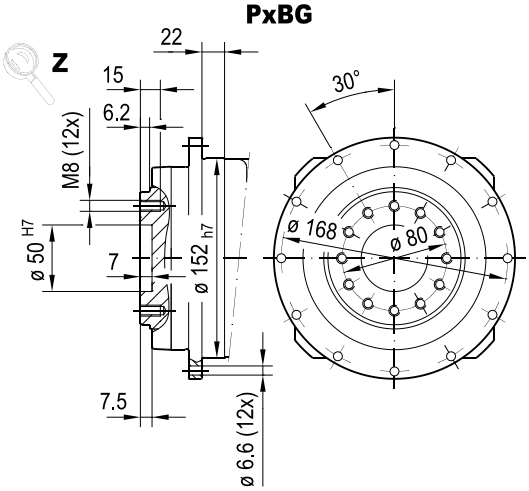

PxCG

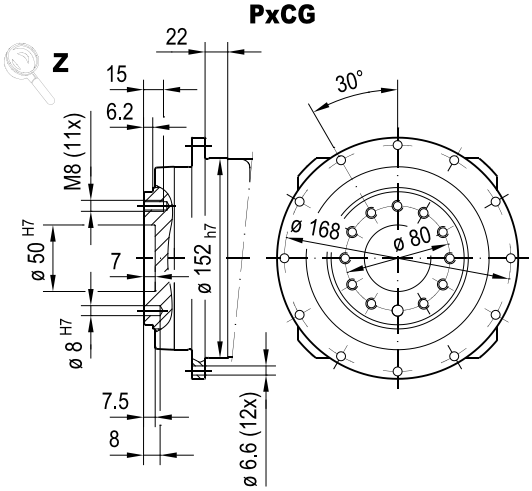

min. □ 120 Fig. A

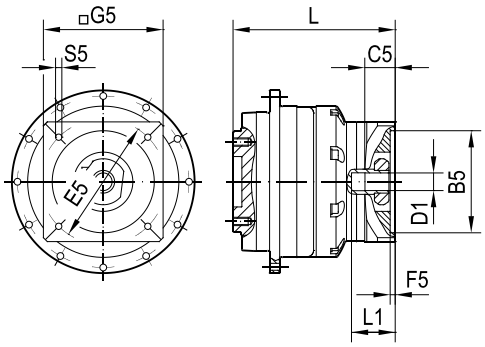

min. □ 152 Fig. B

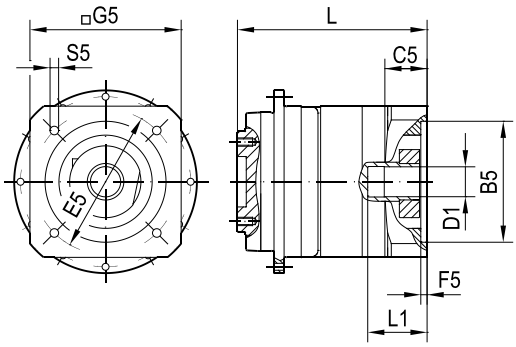

(→ ■ -)	D1	L1	B5	E5	G5	L	C5	F5	S5	Fig.
H.08.02	19	41	80	100	120	157	27	4	M6x15	A
H.09.02	19	42	95	115	120	158	28	4	M8x18	A
H.10.02	19	42	95	130	120	158	28	4	M8x18	A
H.11.02	19	42	110	130	120	158	28	4	M8x18	A
H.12.01	24	50	95	115	120	173	33.5	5	M8x18	A
H.12.02	24	50	95	115	152	173	34.5	5	M8x18	B
H.13.01	24	50	95	130	120	173	33.5	5	M8x18	A
H.13.02	24	50	95	130	152	173	34.5	5	M8x18	B
H.14.01	24	50	110	130	120	173	33.5	5	M8x18	A
H.14.02	24	50	110	130	152	173	34.5	5	M8x18	B
H.15.01	24	51	110	165	143	174	35	5	M10x24	A
H.15.02	24	50	110	165	152	173	35	5	M10x24	B
H.16.01	24	51	130	165	143	174	35	5	M10x24	A
H.16.02	24	50	130	165	152	173	35	5	M10x24	B
H.16.03	24	51	130	165	140	174	35	5	M10x24	A
H.17.02	24	50	180	215	192	173	35	5	M10x24	B
H.18.01	28	60	130	165	143	181	45.5	5	M10x24	A
H.18.02	28	60	130	165	138	181	45.5	5	M10x24	A
H.20.01	32	65	130	165	152	185	43	5	M10x24	B
H.21.01	32	65	130	215	192	185	43	5	M12x28	B
H.22.01	32	62	155	190	163	182	40	5	M10x24	B
H.23.01	32	65	180	215	190	185	43	5	M12x28	B
H.23.02	32	65	180	215	215	185	43	5	M12x28	B
H.24.01	38	80	114.3	200	180	201	58.5	5	M12x28	B
H.25.01	38	80	180	215	192	201	58.5	5	M12x28	B
H.25.02	38	80	180	215	215	201	58.5	5	M12x28	B
H.25.04	38	80	180	215	190	201	58.5	5	M12x28	B
H.26.01	38	80	230	265	240	201	58.5	5	M12x28	B

27781410/EN – 03/2022

			P6BG53							
Gear ratio			**64**	**80**	**112**	**125**	**140**	**160**	**175**	**196**
Short-time duty										
Peak torque	M_{a_pk}	Nm	480	480	480	480	480	480	480	480
Peak motor speed	n_{e_pk}	min^{-1}	6000	6000	6000	6000	6000	6000	6000	6000
Peak radial force	$F_{R_a_pk}$	N	10300	10300	10300	10300	10300	10300	10300	10300
Peak axial force	$F_{A_a_pk}$	N	10300	10300	10300	10300	10300	10300	10300	10300
Peak breakdown torque	$M_{K_a_pk}$	Nm	950	950	950	950	950	950	950	950
Continuous duty										
Nominal torque	M_{a_N}	Nm	275	275	275	295	295	275	295	325
Nominal motor speed	n_{e_N}	min^{-1}	4500	4500	4500	4500	4500	4500	4500	4500
Nominal radial force	$F_{R_a_N}$	N	5280	5690	6370	6600	6860	7170	7390	7670
Nominal axial force	$F_{A_a_N}$	N	8000	8610	8800	8800	8800	8800	8800	8800
Nominal breakdown torque	$M_{K_a_N}$	Nm	595	645	720	745	775	800	800	800
General technical data										
Torsional rigidity	c_{tr}	Nm/ arcmin	196	194	195	171	192	182	181	178
Rotational clearance	φ	arcmin	≤ 3 (R) – 5 (N)							
Pull-out rigidity	c_{pr}	Nm/ arcmin	713							
Service life	L	h	> 30000							
Cyclic duration factor	ED	%	≤ 100							
Gear unit temperature	T_{max}	°C	90							
Ambient temperature	T_{amb}	°C	-15 – +40							
Nominal ambient temperature	T_{amb_N}	°C	20							
Efficiency	η	%	93	93	93	93	93	93	93	93
Sound pressure level	L_P	dB (A)	≤ 57	≤ 57	≤ 57	≤ 57	≤ 57	≤ 57	≤ 57	≤ 57
Degree of protection	–	–	IP65							
No-load speed	M_{e_0}	Nm	0.52	0.44	0.35	0.32	0.29	0.27	0.25	0.23
Emergency stop torque	M_{a_es}	Nm	1350	1350	1350	1350	1350	1350	1350	1350
Mass moment of inertia incl. adapter										
Coupling Ø 14 mm	J	10^{-4} kgm^2	0.57	0.44	0.33	0.42	0.32	0.26	0.31	0.31
Coupling Ø 19 mm	J	10^{-4} kgm^2	0.80	0.67	0.55	0.65	0.54	0.49	0.54	0.53
Coupling Ø 24 mm	J	10^{-4} kgm^2	2.07	1.94	1.82	1.91	1.81	1.76	1.81	1.80
Coupling Ø 28 mm	J	10^{-4} kgm^2	2.62	2.49	2.38	2.47	2.37	2.32	2.37	2.36
Mass incl. adapter										
Coupling Ø min – max	m	kg	13.49 – 18.33							

27781410/EN – 03/2022

P6BG53..

57 084 00 19

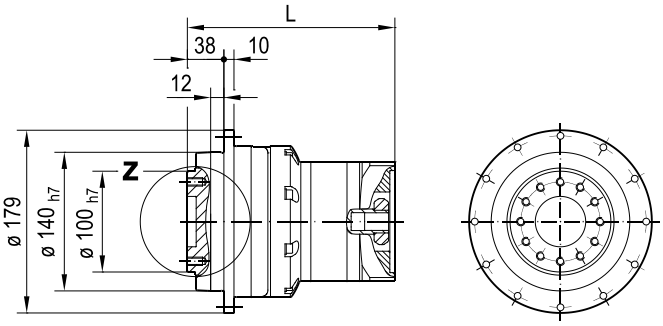

PxBG

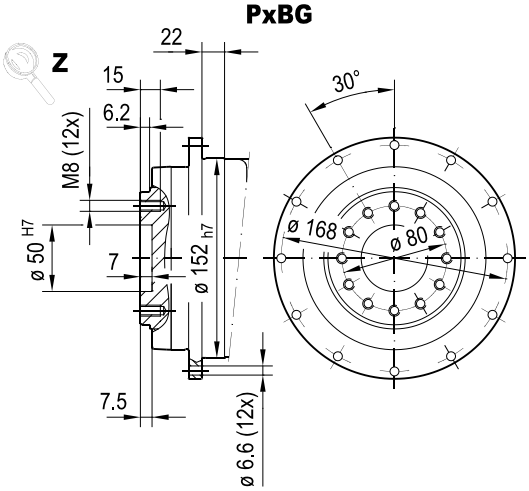

PxCG

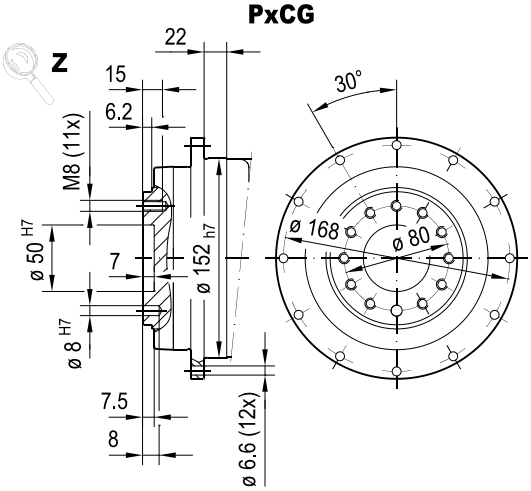

min. □ 95 Fig. A

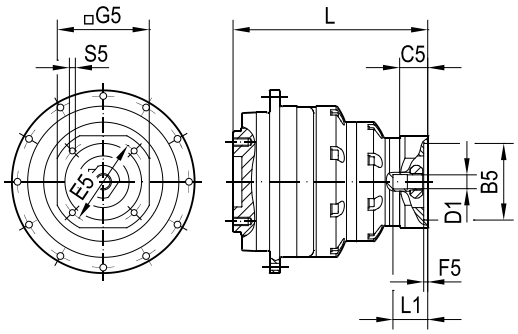

min. □ 120 Fig. B

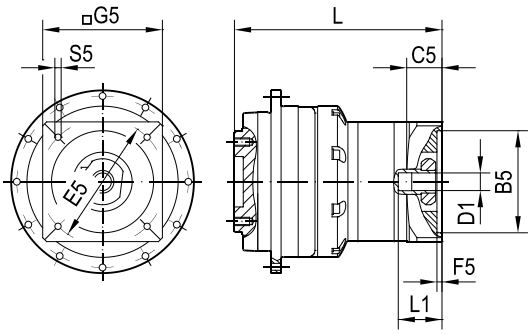

(→ 🕮 -)	D1	L1	B5	E5	G5	L	C5	F5	S5	Fig.
H.04.03	14	37.4	50	95	95	184	24.2	3.5	M6x15	A
H.05.03	14	37.4	60	75	95	184	24.2	3.5	M6x15	A
H.06.03	14	37.4	80	100	95	184	24.2	4	M6x15	A
H.07.02	14	37.4	60	75	95	184	24.2	3.5	M5x12	A
H.08.01	19	42	80	100	95	191	28	4	M6x15	A
H.08.02	19	41	80	100	120	190	27	4	M6x15	B
H.09.01	19	42	95	115	105	191	28	4	M8x18	A
H.09.02	19	42	95	115	120	191	28	4	M8x18	B
H.10.02	19	42	95	130	120	191	28	4	M8x18	B
H.11.02	19	42	110	130	120	191	28	4	M8x18	B
H.12.01	24	50	95	115	120	206	33.5	5	M8x18	B
H.13.01	24	50	95	130	120	206	33.5	5	M8x18	B
H.14.01	24	50	110	130	120	206	33.5	5	M8x18	B
H.15.01	24	51	110	165	143	207	35	5	M10x24	B
H.16.01	24	51	130	165	143	207	35	5	M10x24	B
H.16.03	24	51	130	165	140	207	35	5	M10x24	B
H.17.01	24	52	180	215	192	208	36	5	M10x24	B
H.18.01	28	60	130	165	143	214	45.5	5	M10x24	B
H.18.02	28	60	130	165	138	214	45.5	5	M10x24	B
H.19.01	28	60	180	215	192	214	45.5	5	M12x28	B
H.19.02	28	60	180	215	215	214	45.5	5	M12x28	B
H.32.02	14	37.4	60	82	95	184	24.2	3.5	M5x12	A

27781410/EN – 03/2022

			P6BG53							
Gear ratio			**200**	**245**	**250**	**280**	**350**	**400**	**500**	**700**
Short-time duty										
Peak torque	M_{a_pk}	Nm	480	480	480	480	480	480	480	480
Peak motor speed	n_{e_pk}	min^{-1}	6000	6000	6000	6000	6000	6000	6000	6000
Peak radial force	$F_{R_a_pk}$	N	10300	10300	10300	10300	10300	10300	10300	10300
Peak axial force	$F_{A_a_pk}$	N	10300	10300	10300	10300	10300	10300	10300	10300
Peak breakdown torque	$M_{K_a_pk}$	Nm	950	950	950	950	950	950	950	950
Continuous duty										
Nominal torque	M_{a_N}	Nm	295	325	295	325	325	360	365	300
Nominal motor speed	n_{e_N}	min^{-1}	4500	4500	4500	4500	4500	4500	4500	4500
Nominal radial force	$F_{R_a_N}$	N	7730	8270	8320	8640	8830	8830	8830	8830
Nominal axial force	$F_{A_a_N}$	N	8800	8800	8800	8800	8800	8800	8800	8800
Nominal breakdown torque	$M_{K_a_N}$	Nm	800	800	800	800	800	800	800	800
General technical data										
Torsional rigidity	c_{tr}	Nm/ arcmin	181	178	180	186	177	181	174	151
Rotational clearance	φ	arcmin	≤ 3 (R) – 5 (N)							
Pull-out rigidity	c_{pr}	Nm/ arcmin	713							
Service life	L	h	> 30000							
Cyclic duration factor	ED	%	≤ 100							
Gear unit temperature	T_{max}	°C	90							
Ambient temperature	T_{amb}	°C	-15 – +40							
Nominal ambient temperature	T_{amb_N}	°C	20							
Efficiency	η	%	93	93	93	93	93	93	93	93
Sound pressure level	L_P	dB (A)	≤ 57	≤ 57	≤ 57	≤ 57	≤ 57	≤ 57	≤ 57	≤ 57
Degree of protection	–	–	IP65							
No-load speed	M_{e_0}	Nm	0.23	0.20	0.19	0.18	0.15	0.14	0.12	0.09
Emergency stop torque	M_{a_es}	Nm	1350	1350	1350	1350	1350	1350	1350	1350
Mass moment of inertia incl. adapter										
Coupling Ø 14 mm	J	10^{-4} kgm^2	0.26	0.31	0.26	0.25	0.25	0.25	0.25	0.25
Coupling Ø 19 mm	J	10^{-4} kgm^2	0.49	0.53	0.49	0.48	0.48	0.48	0.48	0.48
Coupling Ø 24 mm	J	10^{-4} kgm^2	1.76	1.80	1.76	1.75	1.75	1.75	1.75	1.75
Coupling Ø 28 mm	J	10^{-4} kgm^2	2.31	2.36	2.31	2.31	2.31	2.30	2.30	2.30
Mass incl. adapter										
Coupling Ø min – max	m	kg	13.49 – 18.33							

27781410/EN – 03/2022

P6BG53..

57 084 00 19

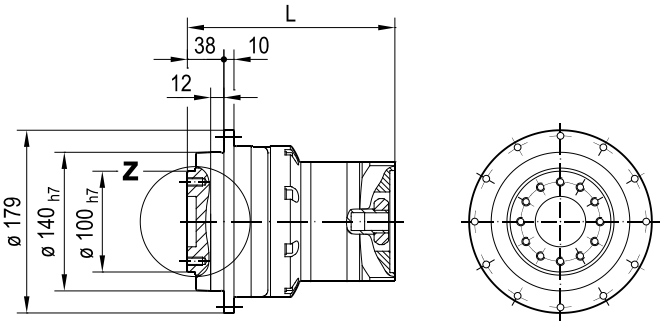

PxBG

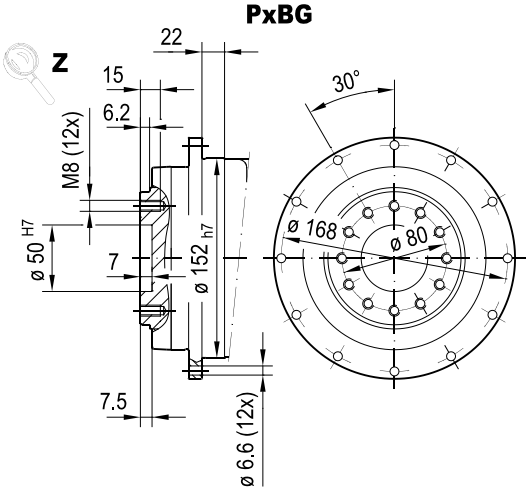

PxCG

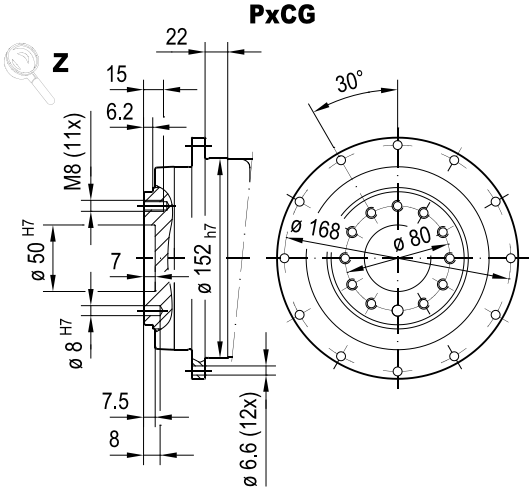

min. □ 95 Fig. A

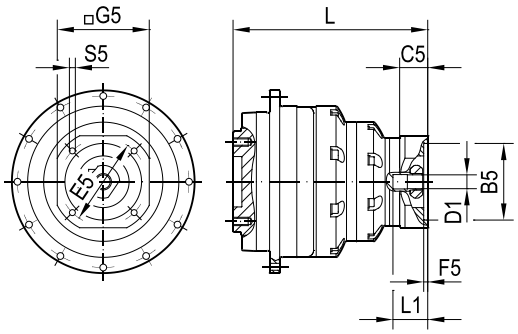

min. □ 120 Fig. B

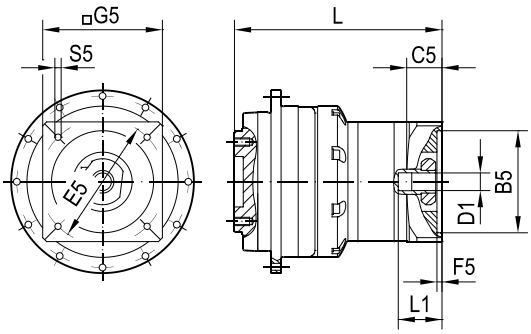

(→ ■ -)	D1	L1	B5	E5	G5	L	C5	F5	S5	Fig.
H.04.03	14	37.4	50	95	95	184	24.2	3.5	M6x15	A
H.05.03	14	37.4	60	75	95	184	24.2	3.5	M6x15	A
H.06.03	14	37.4	80	100	95	184	24.2	4	M6x15	A
H.07.02	14	37.4	60	75	95	184	24.2	3.5	M5x12	A
H.08.01	19	42	80	100	95	191	28	4	M6x15	A
H.08.02	19	41	80	100	120	190	27	4	M6x15	B
H.09.01	19	42	95	115	105	191	28	4	M8x18	A
H.09.02	19	42	95	115	120	191	28	4	M8x18	B
H.10.02	19	42	95	130	120	191	28	4	M8x18	B
H.11.02	19	42	110	130	120	191	28	4	M8x18	B
H.12.01	24	50	95	115	120	206	33.5	5	M8x18	B
H.13.01	24	50	95	130	120	206	33.5	5	M8x18	B
H.14.01	24	50	110	130	120	206	33.5	5	M8x18	B
H.15.01	24	51	110	165	143	207	35	5	M10x24	B
H.16.01	24	51	130	165	143	207	35	5	M10x24	B
H.16.03	24	51	130	165	140	207	35	5	M10x24	B
H.17.01	24	52	180	215	192	208	36	5	M10x24	B
H.18.01	28	60	130	165	143	214	45.5	5	M10x24	B
H.18.02	28	60	130	165	138	214	45.5	5	M10x24	B
H.19.01	28	60	180	215	192	214	45.5	5	M12x28	B
H.19.02	28	60	180	215	215	214	45.5	5	M12x28	B
H.32.02	14	37.4	60	82	95	184	24.2	3.5	M5x12	A

27781410/EN – 03/2022

			P6NG21				
Gear ratio			**3**	**4**	**5**	**7**	**10**
Short-time duty							
Peak torque	M_{a_pk}	Nm	45	45	45	45	42
Peak motor speed	n_{e_pk}	min^{-1}	5400	6000	6000	6000	6000
Peak radial force	$F_{R_a_pk}$	N	800	800	800	800	800
Peak axial force	$F_{A_a_pk}$	N	1460	1460	1460	1460	1460
Peak breakdown torque	$M_{K_a_pk}$	Nm	40	40	40	40	40
Continuous duty							
Nominal torque	M_{a_N}	Nm	19	20	20	20	20
Nominal motor speed	n_{e_N}	min^{-1}	4500	4500	4500	4500	4500
Nominal radial force	$F_{R_a_N}$	N	295	325	350	390	440
Nominal axial force	$F_{A_a_N}$	N	525	590	645	740	850
Nominal breakdown torque	$M_{K_a_N}$	Nm	15	16	17	20	22
General technical data							
Torsional rigidity	c_{tr}	Nm/ arcmin	4	4	4	4	3
Rotational clearance	φ	arcmin	≤ 4 (R) – 6 (N)				
Pull-out rigidity	c_{pr}	Nm/ arcmin	4				
Service life	L	h	> 30000				
Cyclic duration factor	ED	%	≤ 100				
Gear unit temperature	T_{max}	°C	90				
Ambient temperature	T_{amb}	°C	-15 – +40				
Nominal ambient temperature	T_{amb_N}	°C	20				
Efficiency	η	%	98	98	98	98	98
Sound pressure level	L_P	dB (A)	≤ 58	≤ 58	≤ 58	≤ 58	≤ 58
Degree of protection	–	–	IP65				
No-load speed	M_{e_0}	Nm	0.54	0.42	0.38	0.27	0.26
Emergency stop torque	M_{a_es}	Nm	100	100	100	100	90
Mass moment of inertia incl. adapter							
Coupling Ø 11 mm	J	10^{-4} kgm^2	0.21	0.14	0.11	0.09	0.07
Coupling Ø 14 mm	J	10^{-4} kgm^2	0.35	0.28	0.25	0.23	0.22
Coupling Ø 19 mm	J	10^{-4} kgm^2	0.58	0.51	0.48	0.46	0.44
Mass incl. adapter							
Coupling Ø min – max	m	kg	1.83 – 2.76				

27781410/EN – 03/2022

P6NG21..

57 039 00 19

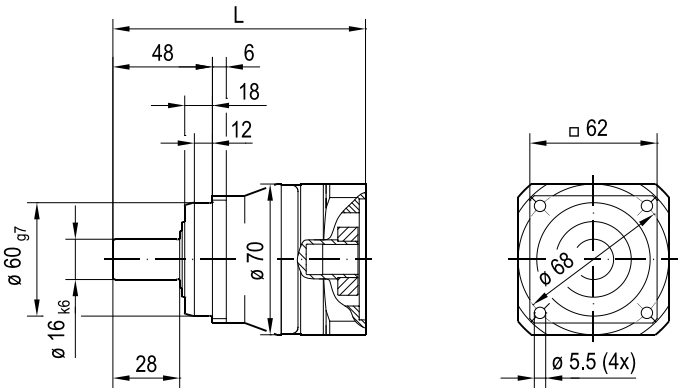

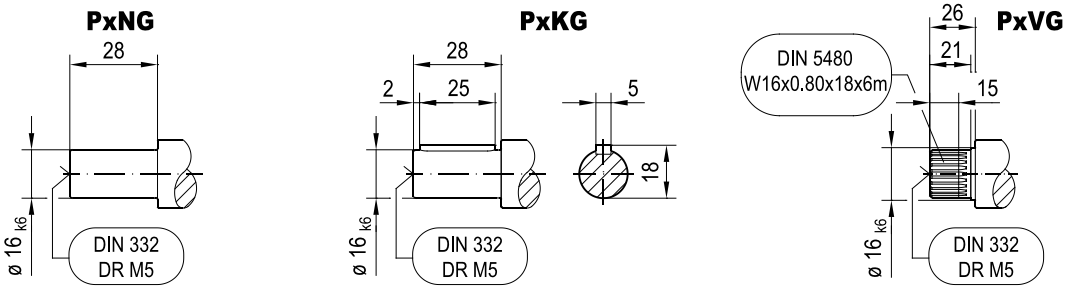

min. □ 73 **Fig. B**

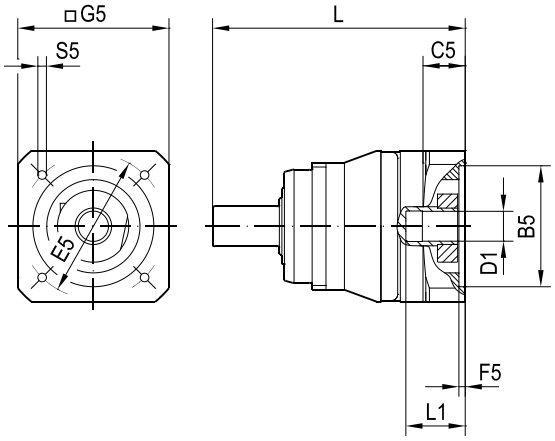

min. □ 95 **Fig. C**

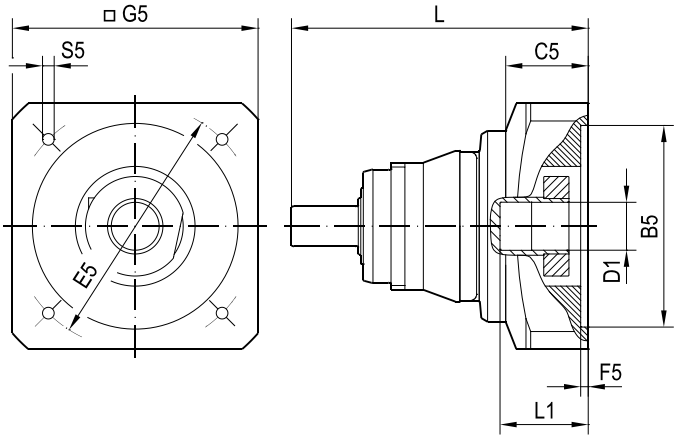

(→)	D1	L1	B5	E5	G5	L	C5	F5	S5	Fig.
H.01.02	11	37.6	40	63	73	142	22.3	0	M4x12	B
H.02.03	11	37.6	60	75	73	142	22.3	3.5	M5x12	B
H.03.02	11	37.6	60	90	73	142	22.3	3.5	M5x12	B
H.04.02	14	37.4	50	95	95	145	25.2	3.5	M6x15	B
H.05.02	14	37.4	60	75	73	145	25.2	3.5	M6x15	B
H.06.02	14	37.4	80	100	95	145	25.2	4	M6x15	B
H.06.05	14	37.4	80	100	88	145	25.2	4	M6x15	B
H.07.01	14	37.4	60	75	73	145	25.2	3.5	M5x12	B
H.08.01	19	42	80	100	95	152	28	4	M6x15	C
H.09.01	19	42	95	115	105	152	28	4	M8x18	C
H.10.01	19	42	95	130	120	152	28	4	M8x18	C
H.11.01	19	42	110	130	120	152	28	4	M8x18	C
H.32.01	14	37.4	60	82	73	145	25.2	3.5	M5x12	B

27781410/EN – 03/2022

			P6NG22										
Gear ratio			**12**	**16**	**20**	**25**	**28**	**30**	**35**	**40**	**50**	**70**	**100**
Short-time duty													
Peak torque	M_{a_pk}	Nm	45	45	45	45	45	45	45	45	45	45	42
Peak motor speed	n_{e_pk}	min^{-1}	6000	6000	6000	6000	6000	6000	6000	6000	6000	6000	6000
Peak radial force	$F_{R_a_pk}$	N	800	800	800	800	800	800	800	800	800	800	800
Peak axial force	$F_{A_a_pk}$	N	1460	1460	1460	1460	1460	1460	1460	1460	1460	1460	1460
Peak breakdown torque	$M_{K_a_pk}$	Nm	40	40	40	40	40	40	40	40	40	40	40
Continuous duty													
Nominal torque	M_{a_N}	Nm	28	30	30	30	30	30	30	30	30	30	30
Nominal motor speed	n_{e_N}	min^{-1}	5500	5500	5500	5500	5500	5500	5500	5500	5500	5500	5500
Nominal radial force	$F_{R_a_N}$	N	435	480	520	560	580	595	625	655	680	680	680
Nominal axial force	$F_{A_a_N}$	N	850	950	1040	1140	1200	1230	1240	1240	1240	1240	1240
Nominal breakdown torque	$M_{K_a_N}$	Nm	22	24	26	28	29	30	31	33	34	34	34
General technical data													
Torsional rigidity	c_{tr}	Nm/ arcmin	5	5	5	4	4	4	4	4	4	4	4
Rotational clearance	φ	arcmin	≤ 6 (R) – 8 (N)										
Pull-out rigidity	c_{pr}	Nm/ arcmin	4										
Service life	L	h	> 30000										
Cyclic duration factor	ED	%	≤ 100										
Gear unit temperature	T_{max}	°C	90										
Ambient temperature	T_{amb}	°C	-15 – +40										
Nominal ambient temperature	T_{amb_N}	°C	20										
Efficiency	η	%	94	94	94	94	94	94	94	94	94	94	94
Sound pressure level	L_P	dB (A)	≤ 57	≤ 57	≤ 57	≤ 57	≤ 57	≤ 57	≤ 57	≤ 57	≤ 57	≤ 57	≤ 57
Degree of protection	–	–	IP65										
No-load speed	M_{e_0}	Nm	0.23	0.22	0.20	0.18	0.18	0.17	0.16	0.16	0.15	0.14	0.14
Emergency stop torque	M_{a_es}	Nm	100	100	100	100	100	100	100	100	100	100	90
Mass moment of inertia incl. adapter													
Coupling Ø 11 mm	J	10^{-4} kgm^2	0.11	0.10	0.09	0.09	0.07	0.07	0.07	0.07	0.07	0.07	0.07
Coupling Ø 14 mm	J	10^{-4} kgm^2	0.25	0.25	0.23	0.23	0.22	0.21	0.22	0.21	0.21	0.21	0.21
Mass incl. adapter													
Coupling Ø min – max	m	kg	2.29 – 2.67										

27781410/EN – 03/2022

P6NG22..

57 040 00 19

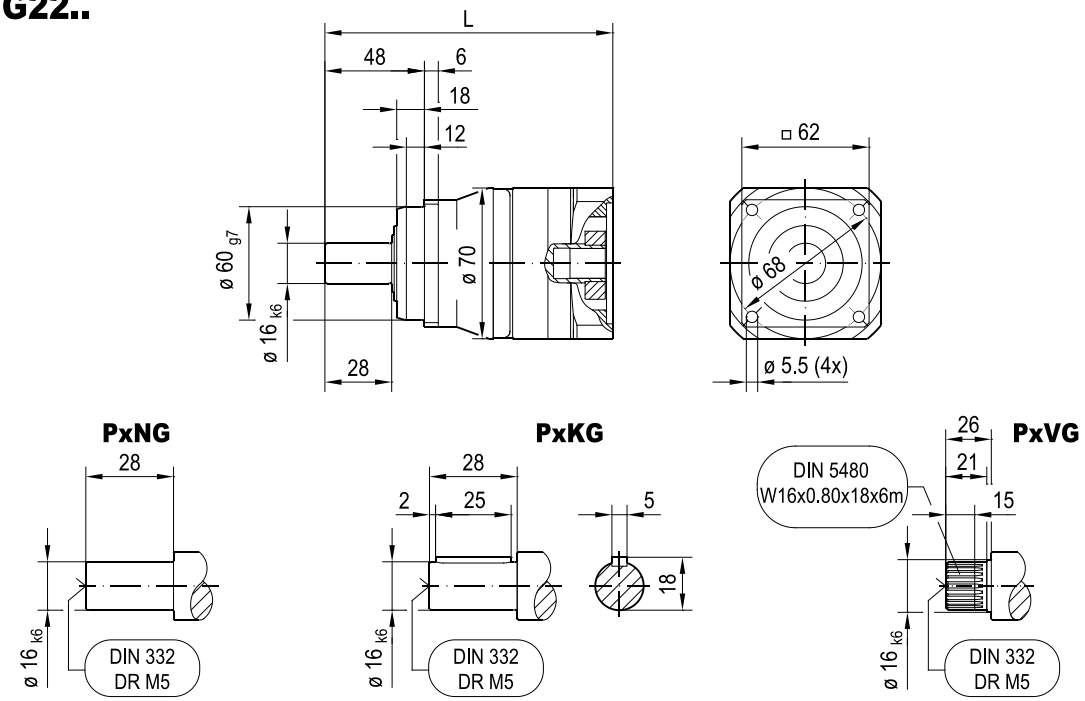

min. □ 55 **Fig. A**

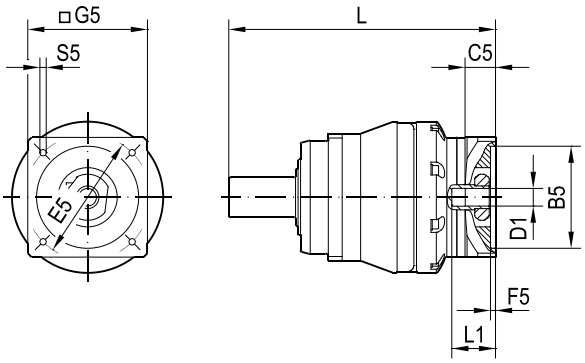

min. □ 73 **Fig. B**

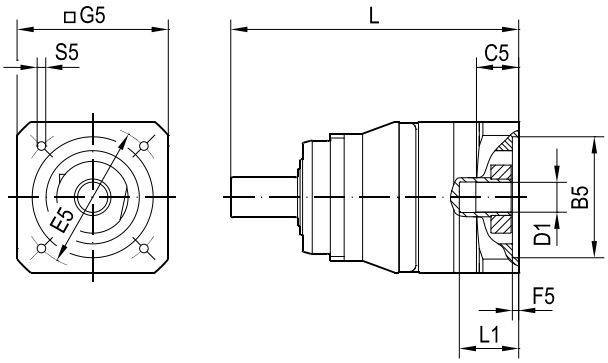

(→ -)	D1	L1	B5	E5	G5	L	C5	F5	S5	Fig.
H.01.03	11	37.6	40	63	55	165	19.7	3.5	M4x12	A
H.02.04	11	37.6	60	75	62	165	19.7	3.5	M5x12	A
H.02.05	11	37.6	60	75	73	165	19.7	3.5	M5x12	A
H.03.03	11	37.6	60	90	73	165	19.7	3.5	M5x12	A
H.04.02	14	37.4	50	95	95	167	25.2	3.5	M6x15	B
H.05.02	14	37.4	60	75	73	167	25.2	3.5	M6x15	B
H.06.02	14	37.4	80	100	95	167	25.2	4	M6x15	B
H.06.05	14	37.4	80	100	88	167	25.2	4	M6x15	B
H.07.01	14	37.4	60	75	73	167	25.2	3.5	M5x12	B
H.32.01	14	37.4	60	82	73	167	25.2	3.5	M5x12	B

27781410/EN – 03/2022

			P6NG31				
Gear ratio			**3**	**4**	**5**	**7**	**10**
Short-time duty							
Peak torque	M_{a_pk}	Nm	68	90	90	90	70
Peak motor speed	n_{e_pk}	min^{-1}	5400	6000	6000	6000	6000
Peak radial force	$F_{R_a_pk}$	N	1050	1050	1050	1050	1050
Peak axial force	$F_{A_a_pk}$	N	1990	1990	1990	1990	1990
Peak breakdown torque	$M_{K_a_pk}$	Nm	61	61	61	61	61
Continuous duty							
Nominal torque	M_{a_N}	Nm	41	51	51	52	53
Nominal motor speed	n_{e_N}	min^{-1}	4500	4500	4500	4500	4500
Nominal radial force	$F_{R_a_N}$	N	360	395	425	475	540
Nominal axial force	$F_{A_a_N}$	N	655	735	800	920	1070
Nominal breakdown torque	$M_{K_a_N}$	Nm	20	23	24	27	31
General technical data							
Torsional rigidity	c_{tr}	Nm/ arcmin	10	11	11	10	9
Rotational clearance	φ	arcmin	≤ 2 (R) – 4 (N)				
Pull-out rigidity	c_{pr}	Nm/ arcmin	9				
Service life	L	h	> 30000				
Cyclic duration factor	ED	%	≤ 100				
Gear unit temperature	T_{max}	°C	90				
Ambient temperature	T_{amb}	°C	-15 – +40				
Nominal ambient temperature	T_{amb_N}	°C	20				
Efficiency	η	%	99	99	99	99	99
Sound pressure level	L_P	dB (A)	≤ 59	≤ 59	≤ 59	≤ 59	≤ 59
Degree of protection	–	–	IP65				
No-load speed	M_{e_0}	Nm	1.10	0.88	0.72	0.49	0.40
Emergency stop torque	M_{a_es}	Nm	139	185	250	250	210
Mass moment of inertia incl. adapter							
Coupling Ø 14 mm	J	10^{-4} kgm^2	0.73	0.49	0.39	0.30	0.25
Coupling Ø 19 mm	J	10^{-4} kgm^2	0.95	0.72	0.62	0.53	0.48
Coupling Ø 24 mm	J	10^{-4} kgm^2	2.22	1.98	1.89	1.80	1.75
Mass incl. adapter							
Coupling Ø min – max	m	kg	3.44 – 6.48				

27781410/EN – 03/2022

P6NG31..

57 007 00 19

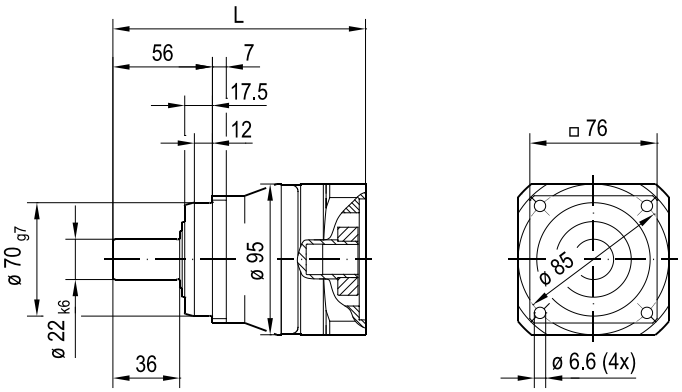

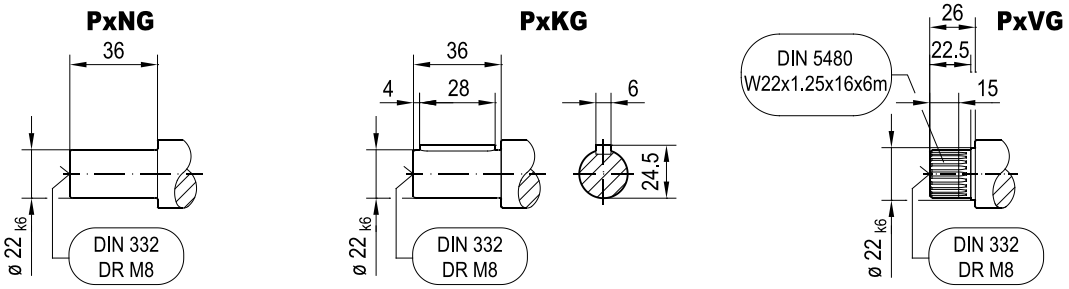

min. □ 95 Fig. B

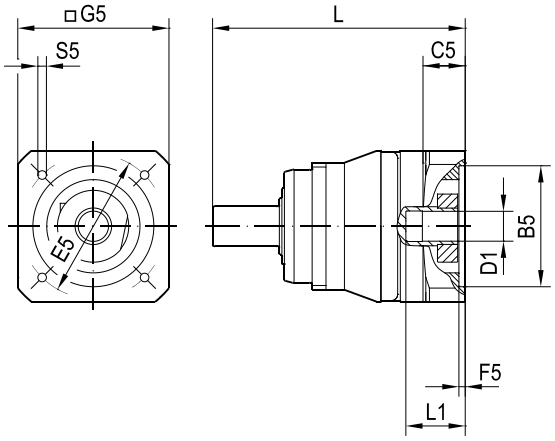

min. □ 120 Fig. C

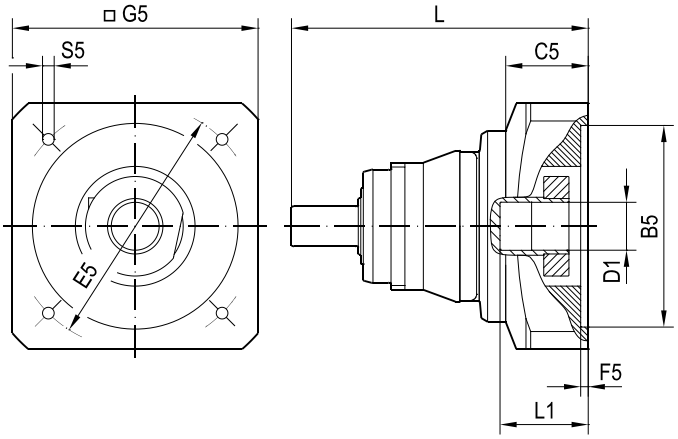

(→ ■ -)	D1	L1	B5	E5	G5	L	C5	F5	S5	Fig.
H.04.03	14	37.4	50	95	95	162	24.2	3.5	M6x15	B
H.05.03	14	37.4	60	75	95	162	24.2	3.5	M6x15	B
H.06.03	14	37.4	80	100	95	162	24.2	4	M6x15	B
H.07.02	14	37.4	60	75	95	162	24.2	3.5	M5x12	B
H.08.01	19	42	80	100	95	170	28	4	M6x15	B
H.09.01	19	42	95	115	105	170	28	4	M8x18	B
H.10.01	19	42	95	130	120	170	28	4	M8x18	B
H.11.01	19	42	110	130	120	170	28	4	M8x18	B
H.12.01	24	50	95	115	120	184	33.5	5	M8x18	C
H.13.01	24	50	95	130	120	184	33.5	5	M8x18	C
H.14.01	24	50	110	130	120	184	33.5	5	M8x18	C
H.15.01	24	51	110	165	143	186	35	5	M10x24	C
H.16.01	24	51	130	165	143	186	35	5	M10x24	C
H.16.03	24	51	130	165	140	186	35	5	M10x24	C
H.17.01	24	52	180	215	192	187	36	5	M10x24	C
H.32.02	14	37.4	60	82	95	162	24.2	3.5	M5x12	B

27781410/EN – 03/2022

			P6NG32										
Gear ratio			**12**	**16**	**20**	**25**	**28**	**30**	**35**	**40**	**50**	**70**	**100**
Short-time duty													
Peak torque	M_{a_pk}	Nm	71	90	90	90	90	71	90	90	90	90	70
Peak motor speed	n_{e_pk}	min^{-1}	6000	6000	6000	6000	6000	6000	6000	6000	6000	6000	6000
Peak radial force	$F_{R_a_pk}$	N	1050	1050	1050	1050	1050	1050	1050	1050	1050	1050	1050
Peak axial force	$F_{A_a_pk}$	N	1990	1990	1990	1990	1990	1990	1990	1990	1990	1990	1990
Peak breakdown torque	$M_{K_a_pk}$	Nm	61	61	61	61	61	61	61	61	61	61	61
Continuous duty													
Nominal torque	M_{a_N}	Nm	55	62	62	72	65	55	72	65	72	72	56
Nominal motor speed	n_{e_N}	min^{-1}	4500	4500	4500	4500	4500	4500	4500	4500	4500	4500	4500
Nominal radial force	$F_{R_a_N}$	N	570	630	680	730	760	775	820	850	890	890	890
Nominal axial force	$F_{A_a_N}$	N	1150	1290	1410	1550	1620	1670	1690	1690	1690	1690	1690
Nominal breakdown torque	$M_{K_a_N}$	Nm	33	36	39	42	44	45	47	49	52	52	52
General technical data													
Torsional rigidity	c_{tr}	Nm/ arcmin	11	11	11	11	11	10	11	11	11	10	9
Rotational clearance	φ	arcmin	≤ 6 (R) – 8 (N)										
Pull-out rigidity	c_{pr}	Nm/ arcmin	9										
Service life	L	h	> 30000										
Cyclic duration factor	ED	%	≤ 100										
Gear unit temperature	T_{max}	°C	90										
Ambient temperature	T_{amb}	°C	-15 – +40										
Nominal ambient temperature	T_{amb_N}	°C	20										
Efficiency	η	%	99	97	97	97	97	97	97	97	97	97	97
Sound pressure level	L_P	dB (A)	≤ 59	≤ 55	≤ 55	≤ 55	≤ 55	≤ 55	≤ 55	≤ 55	≤ 55	≤ 55	≤ 55
Degree of protection	–	–	IP65										
No-load speed	M_{e_0}	Nm	0.40	0.36	0.24	0.18	0.18	0.18	0.16	0.16	0.16	0.15	0.14
Emergency stop torque	M_{a_es}	Nm	145	250	250	250	250	145	250	250	250	250	210
Mass moment of inertia incl. adapter													
Coupling Ø 11 mm	J	10^{-4} kgm^2	0.16	0.15	0.12	0.11	0.09	0.08	0.09	0.07	0.07	0.07	0.07
Coupling Ø 14 mm	J	10^{-4} kgm^2	0.31	0.29	0.26	0.26	0.23	0.22	0.23	0.22	0.22	0.22	0.21
Coupling Ø 19 mm	J	10^{-4} kgm^2	0.53	0.52	0.49	0.48	0.46	0.45	0.46	0.44	0.44	0.44	0.44
Mass incl. adapter													
Coupling Ø min – max	m	kg	3.79 – 4.79										

27781410/EN – 03/2022

P6NG32..

57 008 00 19

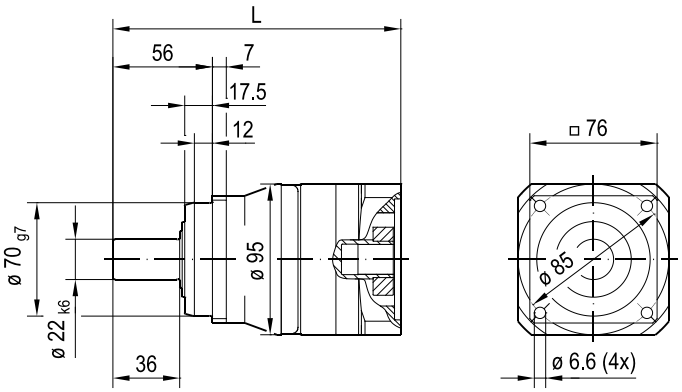

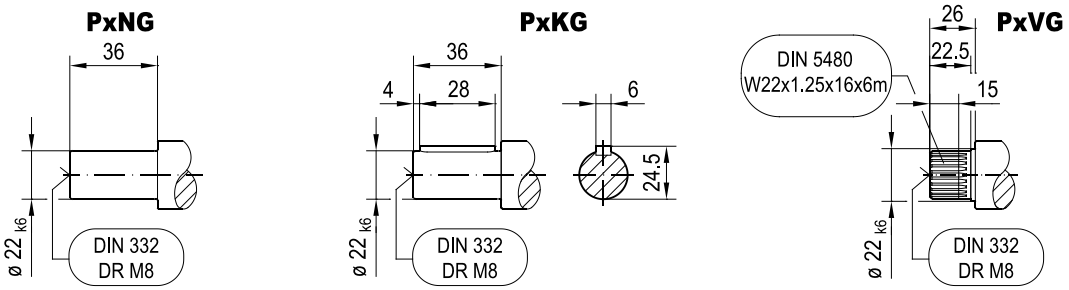

min. □ 73 **Fig. A**

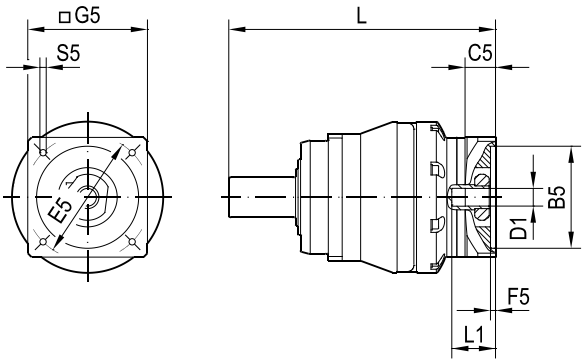

min. □ 95 **Fig. B**

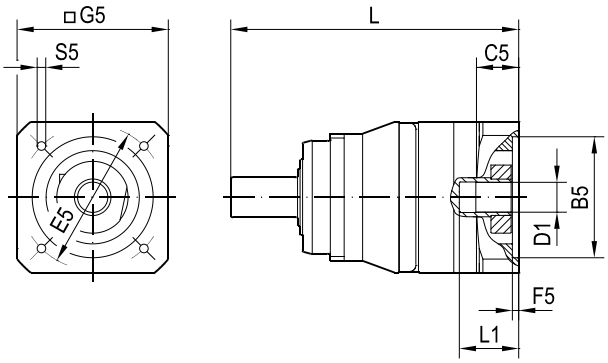

(→ 🕮 -)	D1	L1	B5	E5	G5	L	C5	F5	S5	Fig.
H.01.02	11	37.6	40	63	73	188	22.3	0	M4x12	A
H.02.03	11	37.6	60	75	73	188	22.3	3.5	M5x12	A
H.03.02	11	37.6	60	90	73	188	22.3	3.5	M5x12	A
H.04.02	14	37.4	50	95	95	191	25.2	3.5	M6x15	A
H.04.03	14	37.4	50	95	95	191	24.2	3.5	M6x15	B
H.05.02	14	37.4	60	75	73	191	25.2	3.5	M6x15	A
H.05.03	14	37.4	60	75	95	191	24.2	3.5	M6x15	B
H.06.03	14	37.4	80	100	95	191	24.2	4	M6x15	B
H.06.05	14	37.4	80	100	88	191	25.2	4	M6x15	A
H.07.01	14	37.4	60	75	73	191	25.2	3.5	M5x12	A
H.07.02	14	37.4	60	75	95	191	24.2	3.5	M5x12	B
H.08.01	19	42	80	100	95	198	28	4	M6x15	B
H.09.01	19	42	95	115	105	198	28	4	M8x18	B
H.10.01	19	42	95	130	120	198	28	4	M8x18	B
H.11.01	19	42	110	130	120	198	28	4	M8x18	B
H.32.01	14	37.4	60	82	73	191	25.2	3.5	M5x12	A
H.32.02	14	37.4	60	82	95	191	24.2	3.5	M5x12	B

27781410/EN – 03/2022

			P6NG33							
Gear ratio			**64**	**80**	**112**	**125**	**140**	**160**	**175**	**196**
Short-time duty										
Peak torque	M_{a_pk}	Nm	90	90	90	90	90	90	90	90
Peak motor speed	n_{e_pk}	min^{-1}	6000	6000	6000	6000	6000	6000	6000	6000
Peak radial force	$F_{R_a_pk}$	N	1050	1050	1050	1050	1050	1050	1050	1050
Peak axial force	$F_{A_a_pk}$	N	1990	1990	1990	1990	1990	1990	1990	1990
Peak breakdown torque	$M_{K_a_pk}$	Nm	61	61	61	61	61	61	61	61
Continuous duty										
Nominal torque	M_{a_N}	Nm	62	62	62	72	62	62	72	65
Nominal motor speed	n_{e_N}	min^{-1}	4500	4500	4500	4500	4500	4500	4500	4500
Nominal radial force	$F_{R_a_N}$	N	890	890	890	890	890	890	890	890
Nominal axial force	$F_{A_a_N}$	N	1690	1690	1690	1690	1690	1690	1690	1690
Nominal breakdown torque	$M_{K_a_N}$	Nm	52	52	52	52	52	52	52	52
General technical data										
Torsional rigidity	c_{tr}	Nm/ arcmin	11	10	10	10	10	10	10	10
Rotational clearance	φ	arcmin	≤ 6 (R) – 8 (N)							
Pull-out rigidity	c_{pr}	Nm/ arcmin	9							
Service life	L	h	> 30000							
Cyclic duration factor	ED	%	≤ 100							
Gear unit temperature	T_{max}	°C	90							
Ambient temperature	T_{amb}	°C	-15 – +40							
Nominal ambient temperature	T_{amb_N}	°C	20							
Efficiency	η	%	93	93	93	93	93	93	93	93
Sound pressure level	L_P	dB (A)	≤ 56	≤ 56	≤ 56	≤ 56	≤ 56	≤ 56	≤ 56	≤ 56
Degree of protection	–	–	IP65							
No-load speed	M_{e_0}	Nm	0.16	0.14	0.11	0.10	0.09	0.09	0.08	0.08
Emergency stop torque	M_{a_es}	Nm	250	250	250	250	250	250	250	250
Mass moment of inertia incl. adapter										
Coupling Ø 11 mm	J	10^{-4} kgm^2	0.10	0.09	0.07	0.09	0.07	0.07	0.07	0.07
Coupling Ø 14 mm	J	10^{-4} kgm^2	0.25	0.23	0.22	0.23	0.22	0.21	0.22	0.22
Mass incl. adapter										
Coupling Ø min – max	m	kg	4.28 – 4.66							

27781410/EN – 03/2022

P6NG33..

57 072 00 19

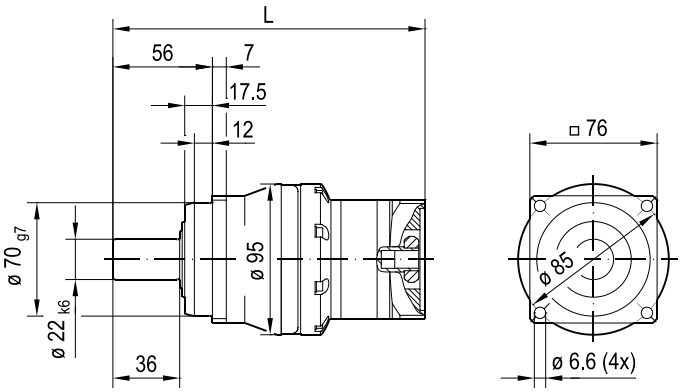

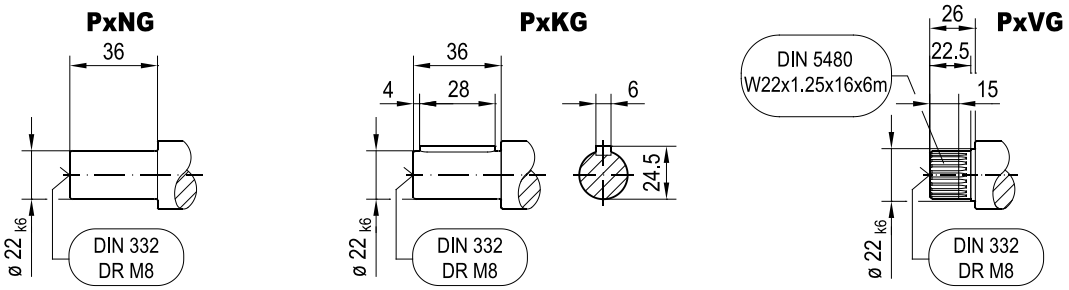

min. □ 55 **Fig. A**

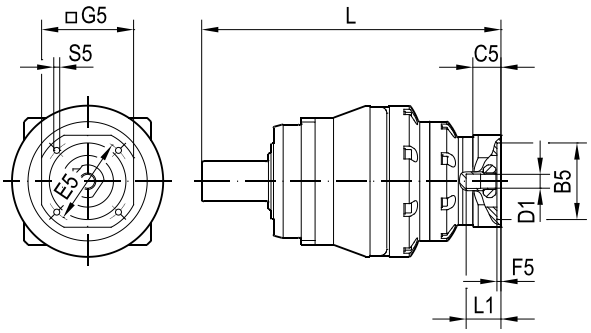

min. □ 73 **Fig. B**

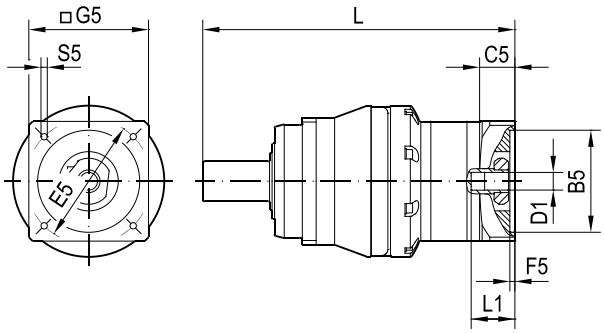

(→ ■ -)	D1	L1	B5	E5	G5	L	C5	F5	S5	Fig.
H.01.03	11	37.6	40	63	55	211	19.7	3.5	M4x12	A
H.02.04	11	37.6	60	75	62	211	19.7	3.5	M5x12	A
H.02.05	11	37.6	60	75	73	211	19.7	3.5	M5x12	A
H.03.03	11	37.6	60	90	73	211	19.7	3.5	M5x12	A
H.04.02	14	37.4	50	95	95	214	25.2	3.5	M6x15	B
H.05.02	14	37.4	60	75	73	214	25.2	3.5	M6x15	B
H.06.02	14	37.4	80	100	95	214	25.2	4	M6x15	B
H.06.05	14	37.4	80	100	88	214	25.2	4	M6x15	B
H.07.01	14	37.4	60	75	73	214	25.2	3.5	M5x12	B
H.32.01	14	37.4	60	82	73	214	25.2	3.5	M5x12	B

27781410/EN – 03/2022

			P6NG33							
Gear ratio			**200**	**245**	**250**	**280**	**350**	**400**	**500**	**700**
Short-time duty										
Peak torque	M_{a_pk}	Nm	90	90	90	90	90	90	90	90
Peak motor speed	n_{e_pk}	min^{-1}	6000	6000	6000	6000	6000	6000	6000	6000
Peak radial force	$F_{R_a_pk}$	N	1050	1050	1050	1050	1050	1050	1050	1050
Peak axial force	$F_{A_a_pk}$	N	1990	1990	1990	1990	1990	1990	1990	1990
Peak breakdown torque	$M_{K_a_pk}$	Nm	61	61	61	61	61	61	61	61
Continuous duty										
Nominal torque	M_{a_N}	Nm	62	72	72	65	72	65	72	72
Nominal motor speed	n_{e_N}	min^{-1}	4500	4500	4500	4500	4500	4500	4500	4500
Nominal radial force	$F_{R_a_N}$	N	890	890	890	890	890	890	890	890
Nominal axial force	$F_{A_a_N}$	N	1690	1690	1690	1690	1690	1690	1690	1690
Nominal breakdown torque	$M_{K_a_N}$	Nm	52	52	52	52	52	52	52	52
General technical data										
Torsional rigidity	c_{tr}	Nm/ arcmin	10	10	10	10	10	10	10	9
Rotational clearance	φ	arcmin	≤ 6 (R) – 8 (N)							
Pull-out rigidity	c_{pr}	Nm/ arcmin	9							
Service life	L	h	> 30000							
Cyclic duration factor	ED	%	≤ 100							
Gear unit temperature	T_{max}	°C	90							
Ambient temperature	T_{amb}	°C	-15 – +40							
Nominal ambient temperature	T_{amb_N}	°C	20							
Efficiency	η	%	93	93	93	93	93	93	93	93
Sound pressure level	L_P	dB (A)	≤ 56	≤ 56	≤ 56	≤ 56	≤ 56	≤ 56	≤ 56	≤ 56
Degree of protection	–	–	IP65							
No-load speed	M_{e_0}	Nm	0.08	0.07	0.07	0.06	0.05	0.05	0.04	0.03
Emergency stop torque	M_{a_es}	Nm	250	250	250	250	250	250	250	250
Mass moment of inertia incl. adapter										
Coupling Ø 11 mm	J	10^{-4} kgm^2	0.07	0.07	0.07	0.07	0.07	0.07	0.07	0.07
Coupling Ø 14 mm	J	10^{-4} kgm^2	0.21	0.22	0.21	0.21	0.21	0.21	0.21	0.21
Mass incl. adapter										
Coupling Ø min – max	m	kg	4.28 – 4.66							

27781410/EN – 03/2022

P6NG33..

57 072 00 19

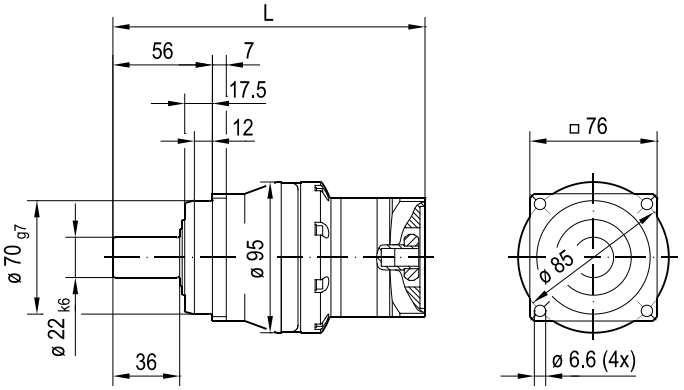

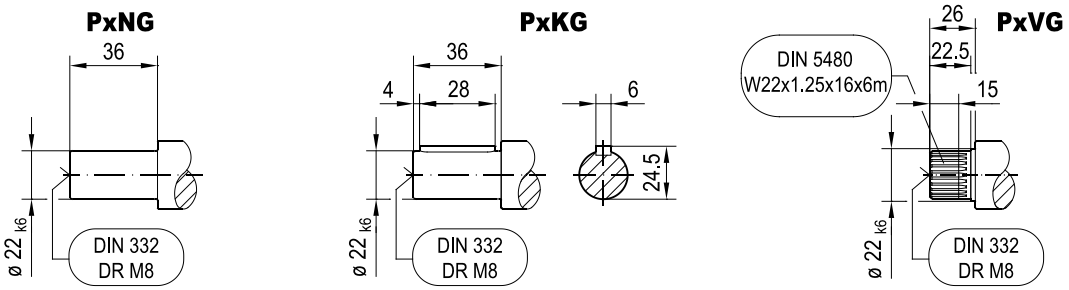

min. □ 55 Fig. A

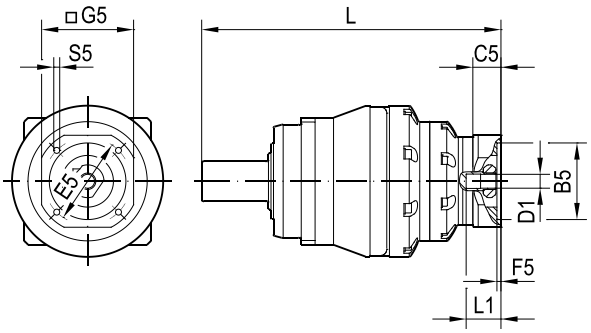

min. □ 73 Fig. B

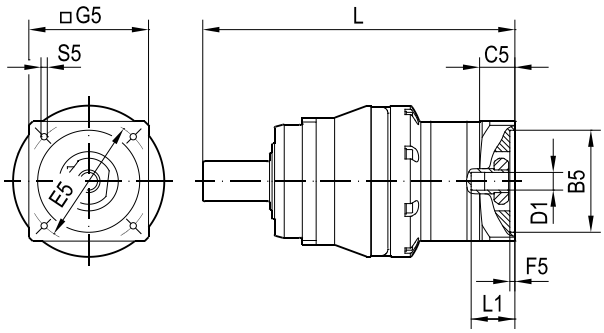

(→ ■ -)	D1	L1	B5	E5	G5	L	C5	F5	S5	Fig.
H.01.03	11	37.6	40	63	55	211	19.7	3.5	M4x12	A
H.02.04	11	37.6	60	75	62	211	19.7	3.5	M5x12	A
H.02.05	11	37.6	60	75	73	211	19.7	3.5	M5x12	A
H.03.03	11	37.6	60	90	73	211	19.7	3.5	M5x12	A
H.04.02	14	37.4	50	95	95	214	25.2	3.5	M6x15	B
H.05.02	14	37.4	60	75	73	214	25.2	3.5	M6x15	B
H.06.02	14	37.4	80	100	95	214	25.2	4	M6x15	B
H.06.05	14	37.4	80	100	88	214	25.2	4	M6x15	B
H.07.01	14	37.4	60	75	73	214	25.2	3.5	M5x12	B
H.32.01	14	37.4	60	82	73	214	25.2	3.5	M5x12	B

27781410/EN – 03/2022

			P6NG41				
Gear ratio			**3**	**4**	**5**	**7**	**10**
Short-time duty							
Peak torque	M_{a_pk}	Nm	180	240	240	240	180
Peak motor speed	n_{e_pk}	min^{-1}	5400	6000	6000	6000	6000
Peak radial force	$F_{R_a_pk}$	N	1050	1050	1050	1050	1050
Peak axial force	$F_{A_a_pk}$	N	2100	2100	2100	2100	2100
Peak breakdown torque	$M_{K_a_pk}$	Nm	72	72	72	72	72
Continuous duty							
Nominal torque	M_{a_N}	Nm	76	95	91	93	97
Nominal motor speed	n_{e_N}	min^{-1}	3500	4000	4500	4500	4500
Nominal radial force	$F_{R_a_N}$	N	565	595	615	690	780
Nominal axial force	$F_{A_a_N}$	N	1110	1180	1230	1410	1640
Nominal breakdown torque	$M_{K_a_N}$	Nm	43	46	47	53	60
General technical data							
Rotational clearance	φ	arcmin	≤ 2 (R) – 4 (N)				
Torsional rigidity	c_{tr}	Nm/ arcmin	34	34	32	29	26
Pull-out rigidity	c_{pr}	Nm/ arcmin	18				
Service life	L	h	> 30000				
Cyclic duration factor	ED	%	≤ 100				
Gear unit temperature	T_{max}	°C	90				
Ambient temperature	T_{amb}	°C	-15 – +40				
Nominal ambient temperature	T_{amb_N}	°C	20				
Efficiency	η	%	99	99	99	99	99
Sound pressure level	L_P	dB (A)	≤ 58	≤ 58	≤ 58	≤ 58	≤ 58
Degree of protection	–	–	IP65				
No-load speed	M_{e_0}	Nm	0.90	0.80	0.60	0.50	0.40
Emergency stop torque	M_{a_es}	Nm	450	625	625	625	570
Mass moment of inertia incl. adapter							
Coupling Ø 19 mm	J	10^{-4} kgm^2	2.58	1.59	1.20	0.82	0.62
Coupling Ø 24 mm	J	10^{-4} kgm^2	3.85	2.86	2.47	2.08	1.89
Coupling Ø 28 mm	J	10^{-4} kgm^2	4.40	3.41	3.02	2.64	2.45
Coupling Ø 32 mm	J	10^{-4} kgm^2	6.68	5.69	5.29	4.93	4.73
Coupling Ø 38 mm	J	10^{-4} kgm^2	9.60	8.61	8.22	7.85	7.66
Mass incl. adapter							
Coupling Ø min – max	m	kg	7.16 – 14.51				

27781410/EN – 03/2022

P6NG41..

57 009 00 19

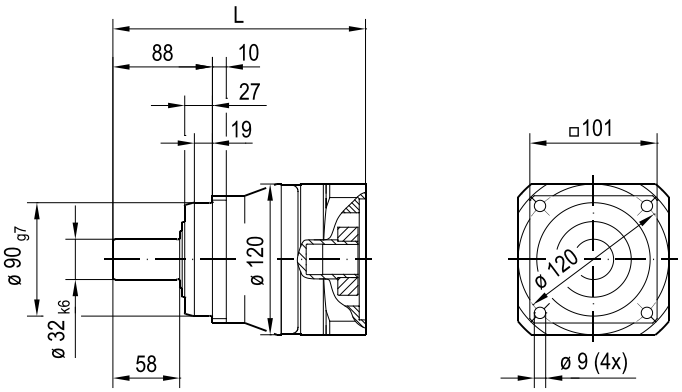

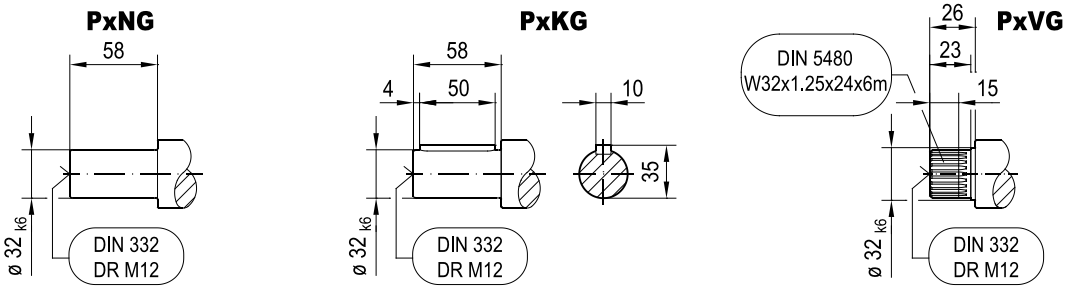

min. □ 120 Fig. B

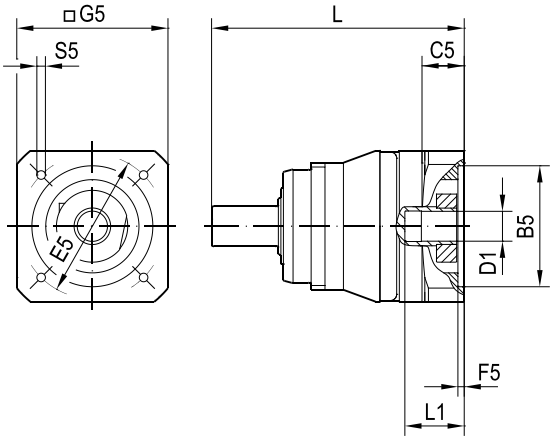

min. □ 152 Fig. C

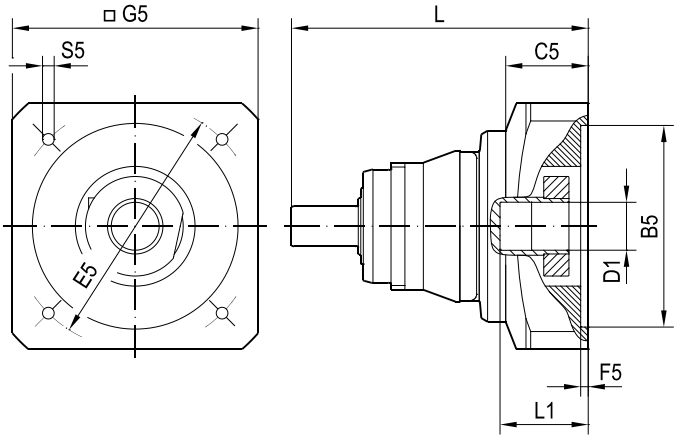

(→ ■ -)	D1	L1	B5	E5	G5	L	C5	F5	S5	Fig.
H.08.02	19	41	80	100	120	204	27	4	M6x15	B
H.09.02	19	42	95	115	120	205	28	4	M8x18	B
H.10.02	19	42	95	130	120	205	28	4	M8x18	B
H.11.02	19	42	110	130	120	205	28	4	M8x18	B
H.12.01	24	50	95	115	120	220	33.5	5	M8x18	B
H.13.01	24	50	95	130	120	220	33.5	5	M8x18	B
H.14.01	24	50	110	130	120	220	33.5	5	M8x18	B
H.15.01	24	51	110	165	143	221	35	5	M10x24	B
H.16.01	24	51	130	165	143	221	35	5	M10x24	B
H.16.03	24	51	130	165	140	221	35	5	M10x24	B
H.17.01	24	52	180	215	192	222	36	5	M10x24	B
H.18.01	28	60	130	165	143	228	45.5	5	M10x24	B
H.18.02	28	60	130	165	138	228	45.5	5	M10x24	B
H.19.01	28	60	180	215	192	228	45.5	5	M12x28	B
H.19.02	28	60	180	215	215	228	45.5	5	M12x28	B
H.20.01	32	65	130	165	152	232	43	5	M10x24	C
H.21.01	32	65	130	215	192	232	43	5	M12x28	C
H.22.01	32	62	155	190	163	229	40	5	M10x24	C
H.23.01	32	65	180	215	190	232	43	5	M12x28	C
H.23.02	32	65	180	215	215	232	43	5	M12x28	C
H.24.01	38	80	114.3	200	180	248	58.5	5	M12x28	C
H.25.01	38	80	180	215	192	248	58.5	5	M12x28	C
H.25.02	38	80	180	215	215	248	58.5	5	M12x28	C
H.25.04	38	80	180	215	190	248	58.5	5	M12x28	C
H.26.01	38	80	230	265	240	248	58.5	5	M12x28	C

27781410/EN – 03/2022

			P6NG42										
Gear ratio			**12**	**16**	**20**	**25**	**28**	**30**	**35**	**40**	**50**	**70**	**100**
Short-time duty													
Peak torque	M_{a_pk}	Nm	189	240	240	240	240	189	240	240	240	240	180
Peak motor speed	n_{e_pk}	min^{-1}	6000	6000	6000	6000	6000	6000	6000	6000	6000	6000	6000
Peak radial force	$F_{R_a_pk}$	N	1730	1730	1730	1730	1730	1730	1730	1730	1730	1730	1730
Peak axial force	$F_{A_a_pk}$	N	3570	3570	3570	3570	3570	3570	3570	3570	3570	3570	3570
Peak breakdown torque	$M_{K_a_pk}$	Nm	72	133	133	133	133	133	133	133	133	133	133
Continuous duty													
Nominal torque	M_{a_N}	Nm	102	138	148	149	164	102	164	183	182	189	144
Nominal motor speed	n_{e_N}	min^{-1}	4500	4500	4500	4500	4500	4500	4500	4500	4500	4500	4500
Nominal radial force	$F_{R_a_N}$	N	820	910	980	1050	1090	1120	1180	1230	1330	1470	1470
Nominal axial force	$F_{A_a_N}$	N	1760	1980	2170	2380	2490	2560	2720	2880	3030	3030	3030
Nominal breakdown torque	$M_{K_a_N}$	Nm	61	70	75	81	84	86	91	95	102	113	113
General technical data													
Torsional rigidity	c_{tr}	Nm/ arcmin	34	34	34	32	33	31	32	32	32	30	27
Rotational clearance	φ	arcmin	≤ 4 (R) – 6 (N)										
Pull-out rigidity	c_{pr}	Nm/ arcmin	18										
Service life	L	h	> 30000										
Cyclic duration factor	ED	%	≤ 100										
Gear unit temperature	T_{max}	°C	90										
Ambient temperature	T_{amb}	°C	-15 – +40										
Nominal ambient temperature	T_{amb_N}	°C	20										
Efficiency	η	%	99	97	97	97	97	97	97	97	97	97	97
Sound pressure level	L_P	dB (A)	≤ 58	≤ 56	≤ 56	≤ 56	≤ 56	≤ 56	≤ 56	≤ 56	≤ 56	≤ 56	≤ 56
Degree of protection	–	–	IP65										
No-load speed	M_{e_0}	Nm	0.40	0.52	0.53	0.48	0.43	0.43	0.28	0.40	0.25	0.20	0.19
Emergency stop torque	M_{a_es}	Nm	475	625	625	625	625	475	625	625	625	625	575
Mass moment of inertia incl. adapter													
Coupling Ø 14 mm	J	10^{-4} kgm^2	0.62	0.56	0.43	0.42	0.32	0.27	0.31	0.26	0.26	0.25	0.25
Coupling Ø 19 mm	J	10^{-4} kgm^2	0.84	0.78	0.66	0.64	0.55	0.50	0.54	0.49	0.48	0.48	0.48
Coupling Ø 24 mm	J	10^{-4} kgm^2	2.11	2.05	1.93	1.91	1.82	1.77	1.81	1.76	1.75	1.75	1.75
Coupling Ø 28 mm	J	10^{-4} kgm^2	2.67	2.60	2.48	2.47	2.37	2.32	2.36	2.31	2.31	2.31	2.30
Mass incl. adapter													
Coupling Ø min – max	m	kg	7.81 – 12.64										

27781410/EN – 03/2022

P6NG42..

57 010 00 19

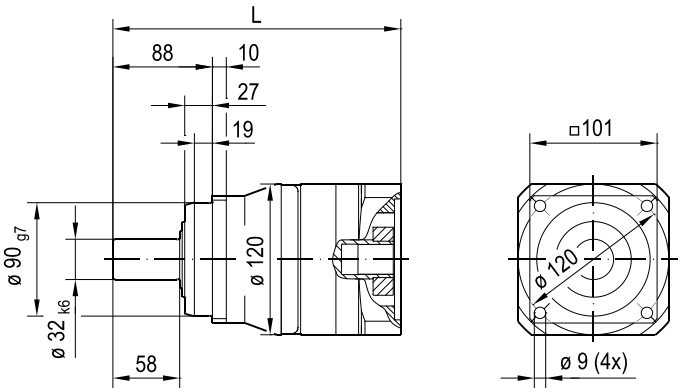

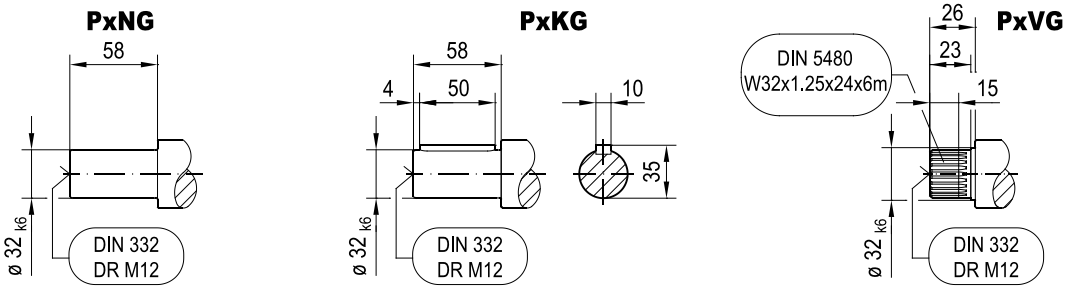

min. □ 95 **Fig. A**

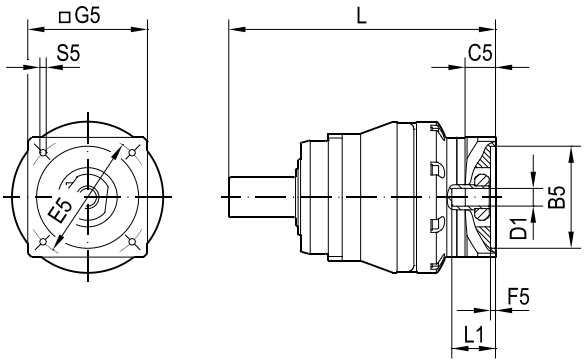

min. □ 120 **Fig. B**

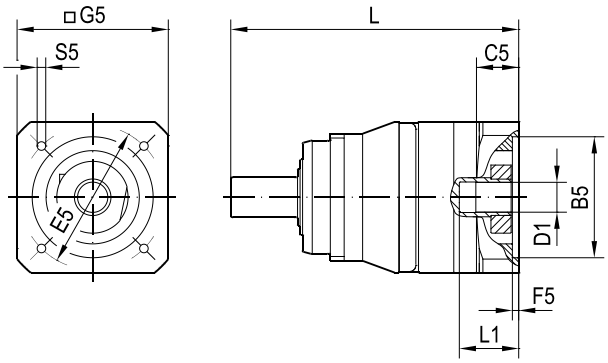

(→ ■ -)	D1	L1	B5	E5	G5	L	C5	F5	S5	Fig.
H.04.03	14	37.4	50	95	95	231	24.2	3.5	M6x15	A
H.05.03	14	37.4	60	75	95	231	24.2	3.5	M6x15	A
H.06.03	14	37.4	80	100	95	231	24.2	4	M6x15	A
H.07.02	14	37.4	60	75	95	231	24.2	3.5	M5x12	A
H.08.01	19	42	80	100	95	238	28	4	M6x15	A
H.08.02	19	41	80	100	120	237	27	4	M6x15	B
H.09.01	19	42	95	115	105	238	28	4	M8x18	A
H.09.02	19	42	95	115	120	238	28	4	M8x18	B
H.10.02	19	42	95	130	120	238	28	4	M8x18	B
H.11.02	19	42	110	130	120	238	28	4	M8x18	B
H.12.01	24	50	95	115	120	253	33.5	5	M8x18	B
H.13.01	24	50	95	130	120	253	33.5	5	M8x18	B
H.14.01	24	50	110	130	120	253	33.5	5	M8x18	B
H.15.01	24	51	110	165	143	254	35	5	M10x24	B
H.16.01	24	51	130	165	143	254	35	5	M10x24	B
H.16.03	24	51	130	165	140	254	35	5	M10x24	B
H.17.01	24	52	180	215	192	255	36	5	M10x24	B
H.18.01	28	60	130	165	143	261	45.5	5	M10x24	B
H.18.02	28	60	130	165	138	261	45.5	5	M10x24	B
H.19.01	28	60	180	215	192	261	45.5	5	M12x28	B
H.19.02	28	60	180	215	215	261	45.5	5	M12x28	B
H.32.02	14	37.4	60	82	95	231	24.2	3.5	M5x12	A

27781410/EN – 03/2022

			P6NG43							
Gear ratio			**64**	**80**	**112**	**125**	**140**	**160**	**175**	**196**
Short-time duty										
Peak torque	M_{a_pk}	Nm	240	240	240	240	240	240	240	240
Peak motor speed	n_{e_pk}	min^{-1}	6000	6000	6000	6000	6000	6000	6000	6000
Peak radial force	$F_{R_a_pk}$	N	1730	1730	1730	1730	1730	1730	1730	1730
Peak axial force	$F_{A_a_pk}$	N	3570	3570	3570	3570	3570	3570	3570	3570
Peak breakdown torque	$M_{K_a_pk}$	Nm	133	133	133	133	133	133	133	133
Continuous duty										
Nominal torque	M_{a_N}	Nm	138	138	138	149	148	138	149	164
Nominal motor speed	n_{e_N}	min^{-1}	4500	4500	4500	4500	4500	4500	4500	4500
Nominal radial force	$F_{R_a_N}$	N	1440	1470	1470	1470	1470	1470	1470	1470
Nominal axial force	$F_{A_a_N}$	N	3030	3030	3030	3030	3030	3030	3030	3030
Nominal breakdown torque	$M_{K_a_N}$	Nm	111	113	113	113	113	113	113	113
General technical data										
Torsional rigidity	c_{tr}	Nm/ arcmin	32	32	32	31	32	31	31	32
Rotational clearance	φ	arcmin	≤ 4 (R) – 6 (N)							
Pull-out rigidity	c_{pr}	Nm/ arcmin	18							
Service life	L	h	> 30000							
Cyclic duration factor	ED	%	≤ 100							
Gear unit temperature	T_{max}	°C	90							
Ambient temperature	T_{amb}	°C	-15 – +40							
Nominal ambient temperature	T_{amb_N}	°C	20							
Efficiency	η	%	93	93	93	93	93	93	93	93
Sound pressure level	L_P	dB (A)	≤ 56	≤ 56	≤ 56	≤ 56	≤ 56	≤ 56	≤ 56	≤ 56
Degree of protection	–	–	IP65							
No-load speed	M_{e_0}	Nm	0.27	0.24	0.19	0.18	0.16	0.15	0.14	0.13
Emergency stop torque	M_{a_es}	Nm	625	625	625	625	625	625	625	625
Mass moment of inertia incl. adapter										
Coupling Ø 11 mm	J	10^{-4} kgm^2	0.15	0.12	0.09	0.11	0.09	0.08	0.09	0.09
Coupling Ø 14 mm	J	10^{-4} kgm^2	0.29	0.26	0.23	0.26	0.23	0.22	0.23	0.23
Coupling Ø 19 mm	J	10^{-4} kgm^2	0.52	0.49	0.46	0.48	0.46	0.45	0.46	0.46
Mass incl. adapter										
Coupling Ø min – max	m	kg	8.19 – 9.19							

27781410/EN – 03/2022

P6NG43..

57 073 00 19

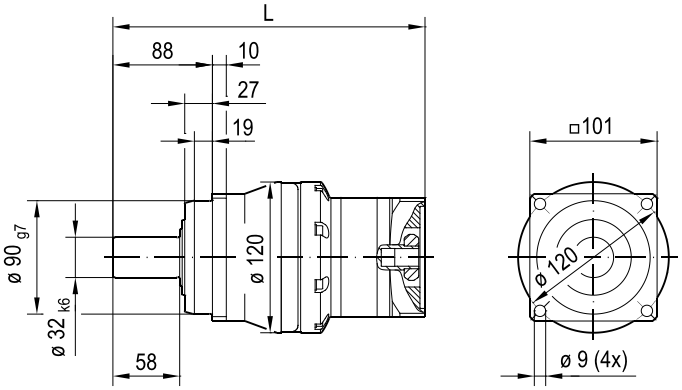

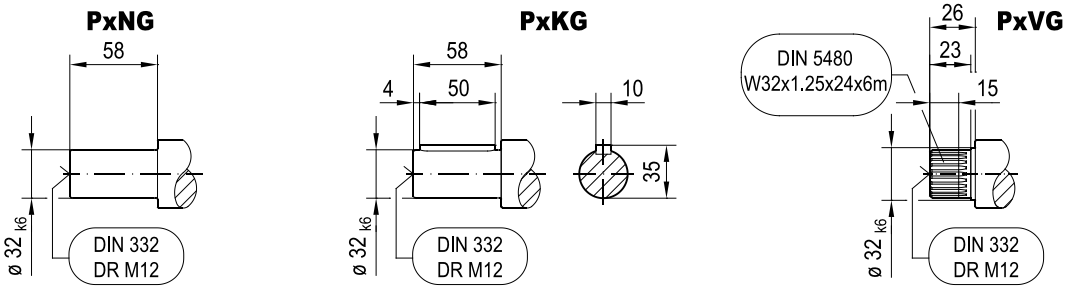

min. □ 73 **Fig. A**

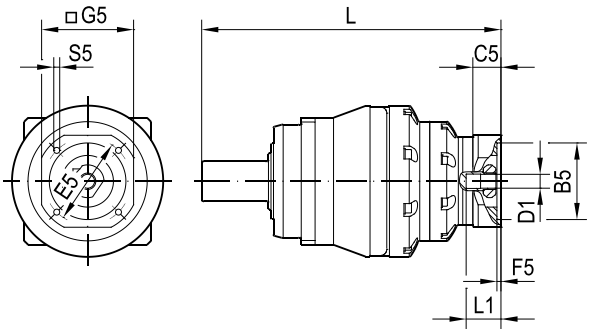

min. □ 95 **Fig. B**

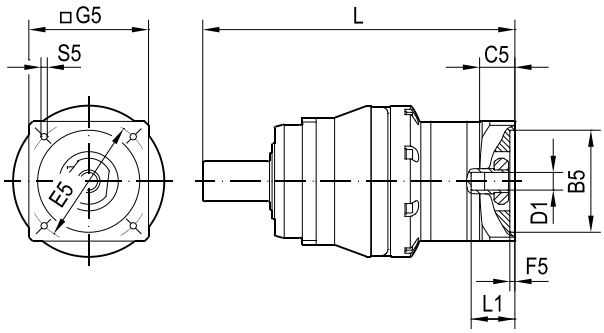

(→ ■ -)	D1	L1	B5	E5	G5	L	C5	F5	S5	Fig.
H.01.02	11	37.6	40	63	73	257	22.3	0	M4x12	A
H.02.03	11	37.6	60	75	73	257	22.3	3.5	M5x12	A
H.03.02	11	37.6	60	90	73	257	22.3	3.5	M5x12	A
H.04.02	14	37.4	50	95	95	260	25.2	3.5	M6x15	A
H.04.03	14	37.4	50	95	95	260	24.2	3.5	M6x15	B
H.05.02	14	37.4	60	75	73	260	25.2	3.5	M6x15	A
H.05.03	14	37.4	60	75	95	260	24.2	3.5	M6x15	B
H.06.03	14	37.4	80	100	95	260	24.2	4	M6x15	B
H.06.05	14	37.4	80	100	88	260	25.2	4	M6x15	A
H.07.01	14	37.4	60	75	73	260	25.2	3.5	M5x12	A
H.07.02	14	37.4	60	75	95	260	24.2	3.5	M5x12	B
H.08.01	19	42	80	100	95	267	28	4	M6x15	B
H.09.01	19	42	95	115	105	267	28	4	M8x18	B
H.10.01	19	42	95	130	120	267	28	4	M8x18	B
H.11.01	19	42	110	130	120	267	28	4	M8x18	B
H.32.01	14	37.4	60	82	73	260	25.2	3.5	M5x12	A
H.32.02	14	37.4	60	82	95	260	24.2	3.5	M5x12	B

27781410/EN – 03/2022

			P6NG43							
Gear ratio			**200**	**245**	**250**	**280**	**350**	**400**	**500**	**700**
Short-time duty										
Peak torque	M_{a_pk}	Nm	240	240	240	240	240	240	240	240
Peak motor speed	n_{e_pk}	min^{-1}	6000	6000	6000	6000	6000	6000	6000	6000
Peak radial force	$F_{R_a_pk}$	N	1730	1730	1730	1730	1730	1730	1730	1730
Peak axial force	$F_{A_a_pk}$	N	3570	3570	3570	3570	3570	3570	3570	3570
Peak breakdown torque	$M_{K_a_pk}$	Nm	133	133	133	133	133	133	133	133
Continuous duty										
Nominal torque	M_{a_N}	Nm	148	164	149	164	164	183	182	189
Nominal motor speed	n_{e_N}	min^{-1}	4500	4500	4500	4500	4500	4500	4500	4500
Nominal radial force	$F_{R_a_N}$	N	1470	1470	1470	1470	1470	1470	1470	1470
Nominal axial force	$F_{A_a_N}$	N	3030	3030	3030	3030	3030	3030	3030	3030
Nominal breakdown torque	$M_{K_a_N}$	Nm	113	113	113	113	113	113	113	113
General technical data										
Torsional rigidity	c_{tr}	Nm/ arcmin	32	31	31	32	31	31	31	29
Rotational clearance	φ	arcmin	≤ 4 (R) – 6 (N)							
Pull-out rigidity	c_{pr}	Nm/ arcmin	18							
Service life	L	h	> 30000							
Cyclic duration factor	ED	%	≤ 100							
Gear unit temperature	T_{max}	°C	90							
Ambient temperature	T_{amb}	°C	-15 – +40							
Nominal ambient temperature	T_{amb_N}	°C	20							
Efficiency	η	%	93	93	93	93	93	93	93	93
Sound pressure level	L_P	dB (A)	≤ 56	≤ 56	≤ 56	≤ 56	≤ 56	≤ 56	≤ 56	≤ 56
Degree of protection	–	–	IP65							
No-load speed	M_{e_0}	Nm	0.13	0.11	0.11	0.10	0.09	0.08	0.07	0.06
Emergency stop torque	M_{a_es}	Nm	625	625	625	625	625	625	625	625
Mass moment of inertia incl. adapter										
Coupling Ø 11 mm	J	10^{-4} kgm^2	0.07	0.09	0.07	0.07	0.07	0.07	0.07	0.07
Coupling Ø 14 mm	J	10^{-4} kgm^2	0.22	0.23	0.22	0.22	0.22	0.21	0.21	0.21
Coupling Ø 19 mm	J	10^{-4} kgm^2	0.44	0.46	0.44	0.44	0.44	0.44	0.44	0.44
Mass incl. adapter										
Coupling Ø min – max	m	kg	8.19 – 9.19							

27781410/EN – 03/2022

P6NG43..

57 073 00 19

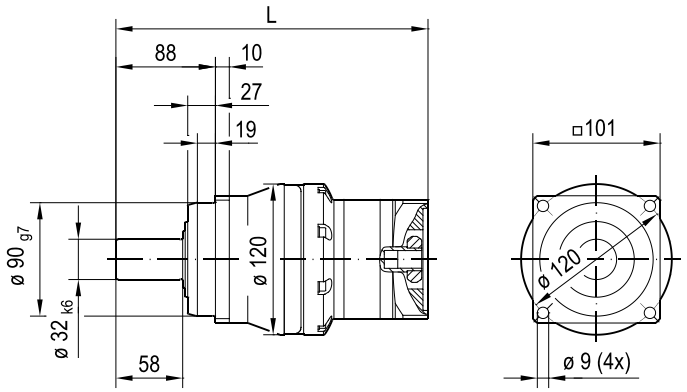

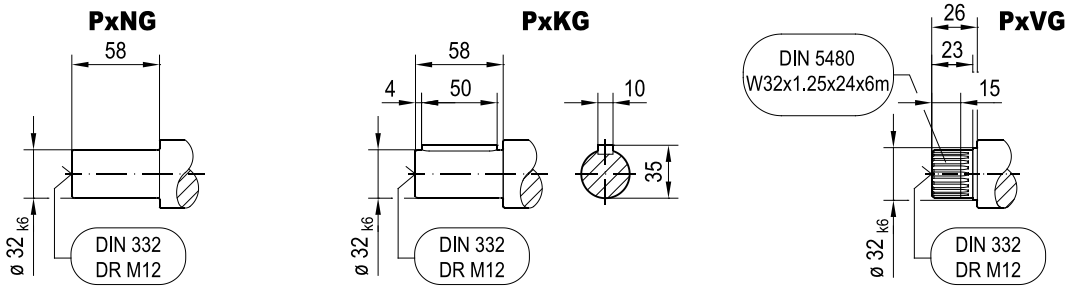

min. □ 73 **Fig. A**

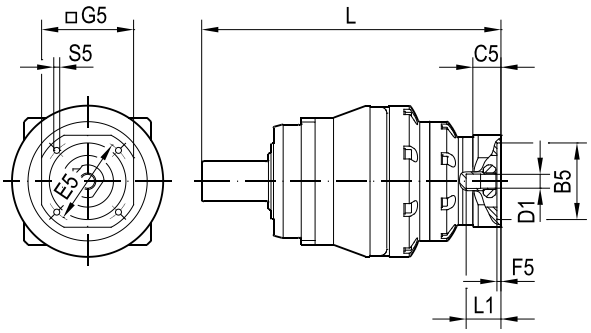

min. □ 95 **Fig. B**

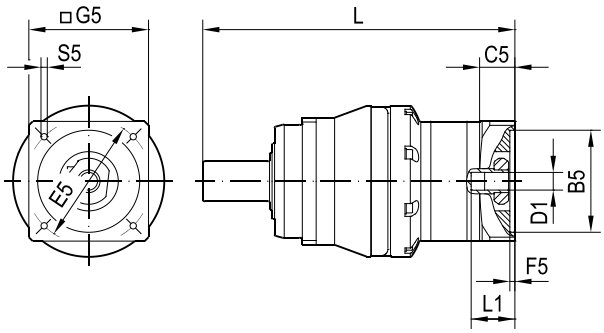

(→)	D1	L1	B5	E5	G5	L	C5	F5	S5	Fig.
H.01.02	11	37.6	40	63	73	257	22.3	0	M4x12	A
H.02.03	11	37.6	60	75	73	257	22.3	3.5	M5x12	A
H.03.02	11	37.6	60	90	73	257	22.3	3.5	M5x12	A
H.04.02	14	37.4	50	95	95	260	25.2	3.5	M6x15	A
H.04.03	14	37.4	50	95	95	260	24.2	3.5	M6x15	B
H.05.02	14	37.4	60	75	73	260	25.2	3.5	M6x15	A
H.05.03	14	37.4	60	75	95	260	24.2	3.5	M6x15	B
H.06.03	14	37.4	80	100	95	260	24.2	4	M6x15	B
H.06.05	14	37.4	80	100	88	260	25.2	4	M6x15	A
H.07.01	14	37.4	60	75	73	260	25.2	3.5	M5x12	A
H.07.02	14	37.4	60	75	95	260	24.2	3.5	M5x12	B
H.08.01	19	42	80	100	95	267	28	4	M6x15	B
H.09.01	19	42	95	115	105	267	28	4	M8x18	B
H.10.01	19	42	95	130	120	267	28	4	M8x18	B
H.11.01	19	42	110	130	120	267	28	4	M8x18	B
H.32.01	14	37.4	60	82	73	260	25.2	3.5	M5x12	A
H.32.02	14	37.4	60	82	95	260	24.2	3.5	M5x12	B

27781410/EN – 03/2022

			P6NG51				
Gear ratio			**3**	**4**	**5**	**7**	**10**
Short-time duty							
Peak torque	M_{a_pk}	Nm	310	480	480	480	380
Peak motor speed	n_{e_pk}	min^{-1}	5230	6000	6000	6000	6000
Peak radial force	$F_{R_a_pk}$	N	1260	1260	1260	1260	1260
Peak axial force	$F_{A_a_pk}$	N	3150	3150	3150	3150	3150
Peak breakdown torque	$M_{K_a_pk}$	Nm	110	110	110	110	110
Continuous duty							
Nominal torque	M_{a_N}	Nm	127	195	182	187	195
Nominal motor speed	n_{e_N}	min^{-1}	3000	3500	4500	4500	4500
Nominal radial force	$F_{R_a_N}$	N	880	920	910	1020	1070
Nominal axial force	$F_{A_a_N}$	N	1850	1950	1930	2210	2560
Nominal breakdown torque	$M_{K_a_N}$	Nm	85	89	88	93	93
General technical data							
Torsional rigidity	c_{tr}	Nm/ arcmin	67	68	66	59	52
Rotational clearance	φ	arcmin	≤ 2 (R) – 4 (N)				
Pull-out rigidity	c_{pr}	Nm/ arcmin	37				
Service life	L	h	> 30000				
Cyclic duration factor	ED	%	≤ 100				
Gear unit temperature	T_{max}	°C	90				
Ambient temperature	T_{amb}	°C	-15 – +40				
Nominal ambient temperature	T_{amb_N}	°C	20				
Efficiency	η	%	99	99	99	99	99
Sound pressure level	L_P	dB (A)	≤ 59	≤ 59	≤ 59	≤ 59	≤ 59
Degree of protection	–	–	IP65				
No-load speed	M_{e_0}	Nm	2.00	1.50	1.20	1.00	0.90
Emergency stop torque	M_{a_es}	Nm	1250	1350	1350	1350	1140
Mass moment of inertia incl. adapter							
Coupling Ø 24 mm	J	10^{-4} kgm^2	8.74	5.53	4.21	3.00	2.34
Coupling Ø 32 mm	J	10^{-4} kgm^2	11.61	8.41	7.08	5.83	5.18
Coupling Ø 38 mm	J	10^{-4} kgm^2	14.54	11.33	10.01	8.76	8.10
Coupling Ø 48 mm	J	10^{-4} kgm^2	28.46	25.26	23.94	22.73	22.08
Mass incl. adapter							
Coupling Ø min – max	m	kg	15.80 – 27.26				

27781410/EN – 03/2022

P6NG51..

57 011 00 19

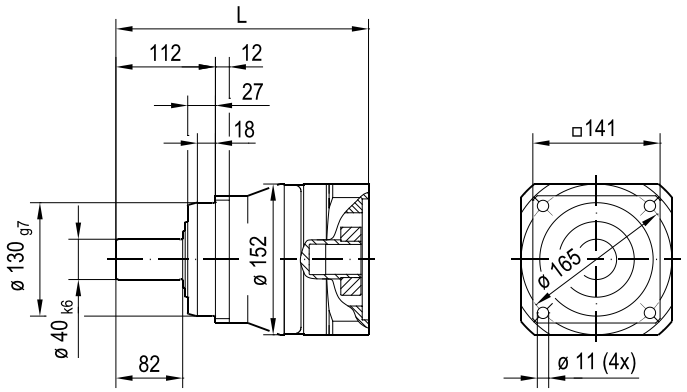

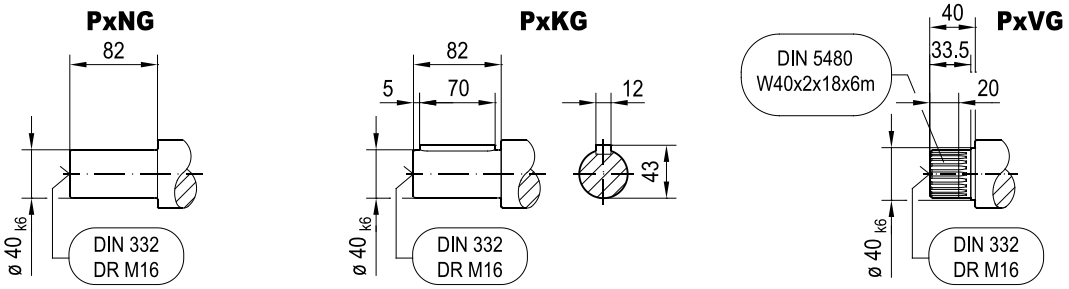

min. □ 152 Fig. B

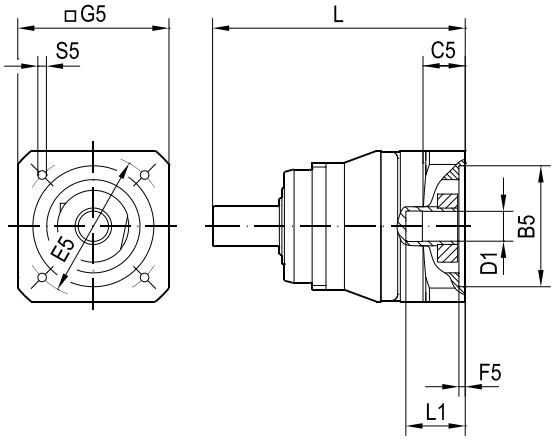

min. □ 215 Fig. C

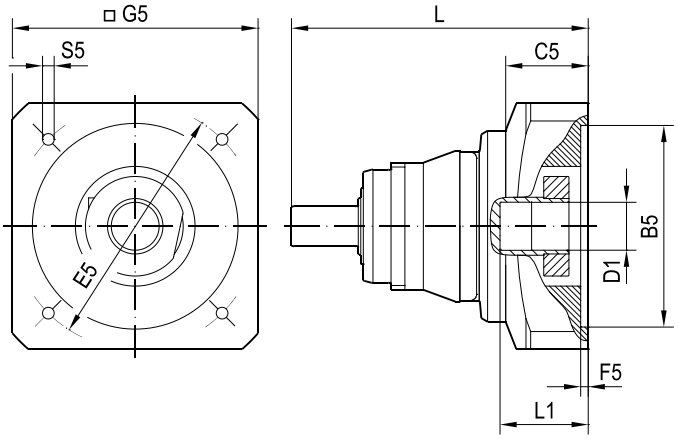

(→ ■ -)	D1	L1	B5	E5	G5	L	C5	F5	S5	Fig.
H.12.02	24	50	95	115	152	258	34.5	5	M8x18	B
H.13.02	24	50	95	130	152	258	34.5	5	M8x18	B
H.14.02	24	50	110	130	152	258	34.5	5	M8x18	B
H.15.02	24	50	110	165	152	259	35	5	M10x24	B
H.16.02	24	50	130	165	152	259	35	5	M10x24	B
H.17.02	24	50	180	215	192	259	35	5	M10x24	B
H.20.01	32	65	130	165	152	271	43	5	M10x24	B
H.21.01	32	65	130	215	192	271	43	5	M12x28	B
H.22.01	32	62	155	190	163	268	40	5	M10x24	B
H.23.01	32	65	180	215	190	271	43	5	M12x28	B
H.23.02	32	65	180	215	215	271	43	5	M12x28	B
H.24.01	38	80	114.3	200	180	286	58.5	5	M12x28	B
H.25.01	38	80	180	215	192	286	58.5	5	M12x28	B
H.25.02	38	80	180	215	215	286	58.5	5	M12x28	B
H.25.04	38	80	180	215	190	286	58.5	5	M12x28	B
H.26.01	38	80	230	265	240	286	58.5	5	M12x28	B
H.27.01	48	85	180	215	215	298	54.5	7	M12x28	C
H.28.01	48	110	230	265	240	323	79.5	7	M12x28	C
H.30.01	48	82	250	300	262	295	51.5	7	M16x36	C

27781410/EN – 03/2022

			P6NG52										
Gear ratio			**12**	**16**	**20**	**25**	**28**	**30**	**35**	**40**	**50**	**70**	**100**
Short-time duty													
Peak torque	M_{a_pk}	Nm	325	480	480	480	480	325	480	480	480	480	380
Peak motor speed	n_{e_pk}	min^{-1}	6000	6000	6000	6000	6000	6000	6000	6000	6000	6000	6000
Peak radial force	$F_{R_a_pk}$	N	2800	2800	2800	2800	2800	2800	2800	2800	2800	2800	2800
Peak axial force	$F_{A_a_pk}$	N	6240	6240	6240	6240	6240	6240	6240	6240	6240	6240	6240
Peak breakdown torque	$M_{K_a_pk}$	Nm	110	270	270	270	270	270	270	270	270	270	270
Continuous duty													
Nominal torque	M_{a_N}	Nm	172	275	295	295	325	172	325	360	365	300	300
Nominal motor speed	n_{e_N}	min^{-1}	4500	4500	4500	4500	4500	4500	4500	4500	4500	4500	4500
Nominal radial force	$F_{R_a_N}$	N	1220	1340	1450	1560	1620	1660	1740	1820	1970	2200	2380
Nominal axial force	$F_{A_a_N}$	N	2760	3100	3390	3720	3890	4000	4260	4500	4930	5310	5310
Nominal breakdown torque	$M_{K_a_N}$	Nm	93	130	140	150	156	160	168	176	190	210	230
General technical data													
Torsional rigidity	c_{tr}	Nm/ arcmin	69	70	69	68	69	65	67	67	67	61	54
Rotational clearance	φ	arcmin	≤ 4 (R) – 6 (N)										
Pull-out rigidity	c_{pr}	Nm/ arcmin	37										
Service life	L	h	> 30000										
Cyclic duration factor	ED	%	≤ 100										
Gear unit temperature	T_{max}	°C	90										
Ambient temperature	T_{amb}	°C	-15 – +40										
Nominal ambient temperature	T_{amb_N}	°C	20										
Efficiency	η	%	99	97	97	97	97	97	97	97	97	97	97
Sound pressure level	L_P	dB (A)	≤ 59	≤ 59	≤ 59	≤ 59	≤ 59	≤ 59	≤ 59	≤ 59	≤ 59	≤ 59	≤ 59
Degree of protection	–	–	IP65										
No-load speed	M_{e_0}	Nm	0.90	1.10	1.00	0.96	0.80	0.80	0.60	0.55	0.45	0.40	0.40
Emergency stop torque	M_{a_es}	Nm	1180	1350	1350	1350	1350	1180	1350	1350	1350	1350	1140
Mass moment of inertia incl. adapter													
Coupling Ø 19 mm	J	10^{-4} kgm^2	1.95	1.75	1.30	1.24	0.87	0.68	0.84	0.65	0.63	0.62	0.62
Coupling Ø 24 mm	J	10^{-4} kgm^2	3.21	3.01	2.57	2.51	2.14	1.95	2.11	1.92	1.90	1.89	1.88
Coupling Ø 28 mm	J	10^{-4} kgm^2	3.76	3.56	3.12	3.06	2.69	2.50	2.66	2.47	2.46	2.45	2.44
Coupling Ø 32 mm	J	10^{-4} kgm^2	6.04	5.84	5.39	5.34	4.98	4.79	4.95	4.76	4.75	4.73	4.73
Coupling Ø 38 mm	J	10^{-4} kgm^2	8.96	8.76	8.32	8.26	7.90	7.72	7.88	7.68	7.67	7.66	7.65
Mass incl. adapter													
Coupling Ø min – max	m	kg	16.27 – 23.99										

27781410/EN – 03/2022

P6NG52..

57 012 00 19

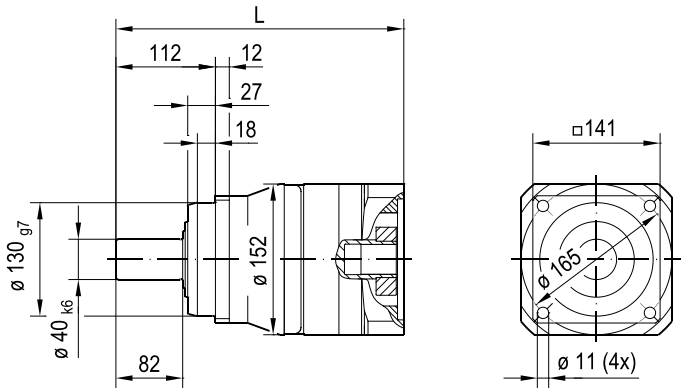

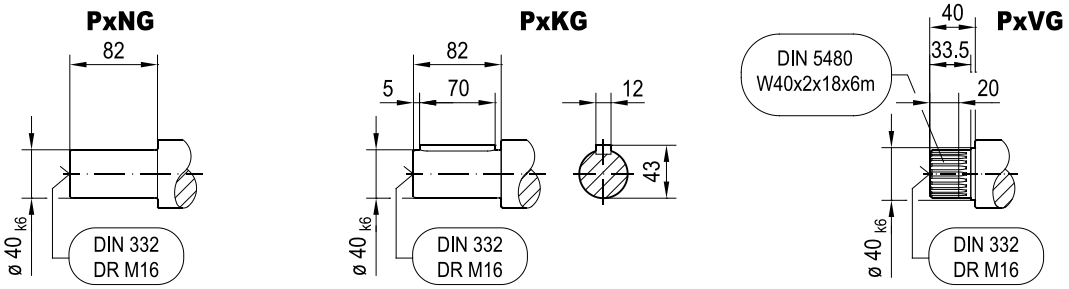

min. □ 120 Fig. A

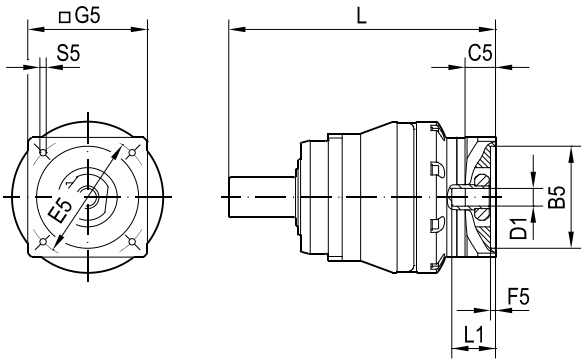

min. □ 152 Fig. B

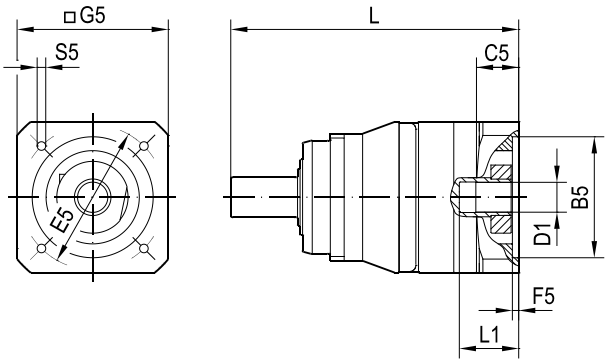

(→ ■ -)	D1	L1	B5	E5	G5	L	C5	F5	S5	Fig.
H.08.02	19	41	80	100	120	283	27	4	M6x15	A
H.09.02	19	42	95	115	120	284	28	4	M8x18	A
H.10.02	19	42	95	130	120	284	28	4	M8x18	A
H.11.02	19	42	110	130	120	284	28	4	M8x18	A
H.12.01	24	50	95	115	120	299	33.5	5	M8x18	A
H.12.02	24	50	95	115	152	299	34.5	5	M8x18	B
H.13.01	24	50	95	130	120	299	33.5	5	M8x18	A
H.13.02	24	50	95	130	152	299	34.5	5	M8x18	B
H.14.01	24	50	110	130	120	299	33.5	5	M8x18	A
H.14.02	24	50	110	130	152	299	34.5	5	M8x18	B
H.15.01	24	51	110	165	143	300	35	5	M10x24	A
H.15.02	24	50	110	165	152	299	35	5	M10x24	B
H.16.01	24	51	130	165	143	300	35	5	M10x24	A
H.16.02	24	50	130	165	152	299	35	5	M10x24	B
H.16.03	24	51	130	165	140	300	35	5	M10x24	A
H.17.02	24	50	180	215	192	299	35	5	M10x24	B
H.18.01	28	60	130	165	143	307	45.5	5	M10x24	A
H.18.02	28	60	130	165	138	307	45.5	5	M10x24	A
H.20.01	32	65	130	165	152	311	43	5	M10x24	B
H.21.01	32	65	130	215	192	311	43	5	M12x28	B
H.22.01	32	62	155	190	163	308	40	5	M10x24	B
H.23.01	32	65	180	215	190	311	43	5	M12x28	B
H.23.02	32	65	180	215	215	311	43	5	M12x28	B
H.24.01	38	80	114.3	200	180	327	58.5	5	M12x28	B
H.25.01	38	80	180	215	192	327	58.5	5	M12x28	B
H.25.02	38	80	180	215	215	327	58.5	5	M12x28	B
H.25.04	38	80	180	215	190	327	58.5	5	M12x28	B
H.26.01	38	80	230	265	240	327	58.5	5	M12x28	B

27781410/EN – 03/2022

			P6NG53							
Gear ratio			**64**	**80**	**112**	**125**	**140**	**160**	**175**	**196**
Short-time duty										
Peak torque	M_{a_pk}	Nm	480	480	480	480	480	480	480	480
Peak motor speed	n_{e_pk}	min^{-1}	6000	6000	6000	6000	6000	6000	6000	6000
Peak radial force	$F_{R_a_pk}$	N	2800	2800	2800	2800	2800	2800	2800	2800
Peak axial force	$F_{A_a_pk}$	N	6240	6240	6240	6240	6240	6240	6240	6240
Peak breakdown torque	$M_{K_a_pk}$	Nm	270	270	270	270	270	270	270	270
Continuous duty										
Nominal torque	M_{a_N}	Nm	275	275	275	295	295	275	295	325
Nominal motor speed	n_{e_N}	min^{-1}	4500	4500	4500	4500	4500	4500	4500	4500
Nominal radial force	$F_{R_a_N}$	N	2130	2300	2380	2380	2380	2380	2380	2380
Nominal axial force	$F_{A_a_N}$	N	5310	5310	5310	5310	5310	5310	5310	5310
Nominal breakdown torque	$M_{K_a_N}$	Nm	205	220	230	230	230	230	230	230
General technical data										
Torsional rigidity	c_{tr}	Nm/ arcmin	66	66	65	64	65	66	63	65
Rotational clearance	φ	arcmin	≤ 4 (R) – 6 (N)							
Pull-out rigidity	c_{pr}	Nm/ arcmin	37							
Service life	L	h	> 30000							
Cyclic duration factor	ED	%	≤ 100							
Gear unit temperature	T_{max}	°C	90							
Ambient temperature	T_{amb}	°C	-15 – +40							
Nominal ambient temperature	T_{amb_N}	°C	20							
Efficiency	η	%	93	93	93	93	93	93	93	93
Sound pressure level	L_P	dB (A)	≤ 57	≤ 57	≤ 57	≤ 57	≤ 57	≤ 57	≤ 57	≤ 57
Degree of protection	–	–	IP65							
No-load speed	M_{e_0}	Nm	0.52	0.44	0.35	0.32	0.30	0.27	0.25	0.23
Emergency stop torque	M_{a_es}	Nm	1350	1350	1350	1350	1350	1350	1350	1350
Mass moment of inertia incl. adapter										
Coupling Ø 14 mm	J	10^{-4} kgm^2	0.57	0.44	0.32	0.42	0.31	0.26	0.31	0.31
Coupling Ø 19 mm	J	10^{-4} kgm^2	0.79	0.67	0.55	0.65	0.54	0.49	0.54	0.53
Coupling Ø 24 mm	J	10^{-4} kgm^2	2.06	1.93	1.82	1.91	1.81	1.76	1.81	1.80
Coupling Ø 28 mm	J	10^{-4} kgm^2	2.61	2.49	2.38	2.47	2.37	2.31	2.37	2.36
Mass incl. adapter										
Coupling Ø min – max	m	kg	16.98 – 21.83							

27781410/EN – 03/2022

P6NG53..

57 074 00 19

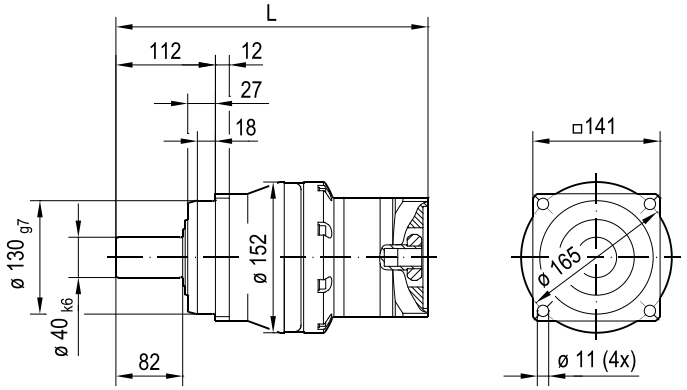

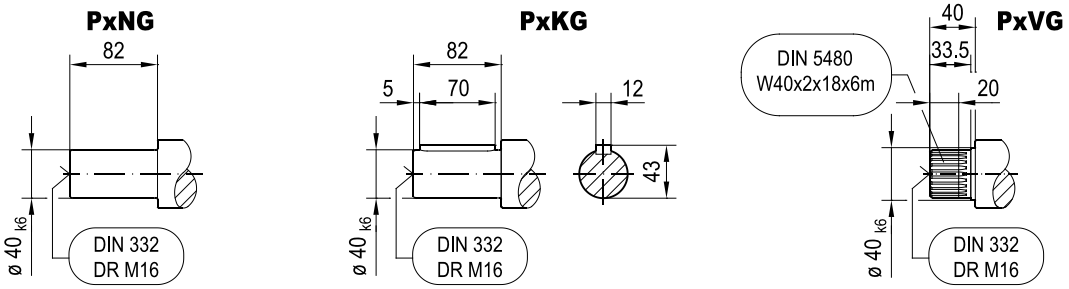

min. □ 95 Fig. A

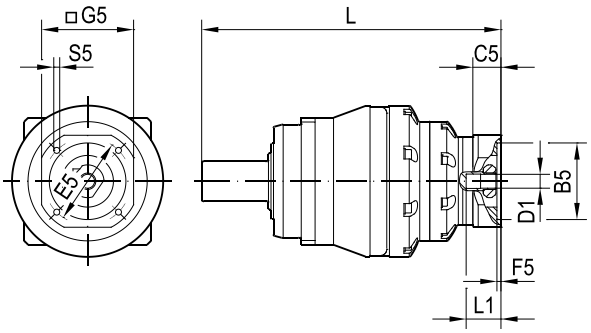

min. □ 120 Fig. B

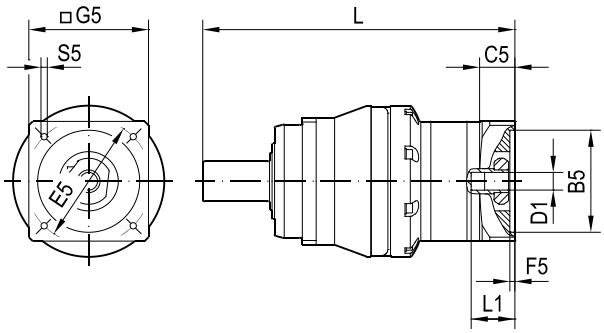

(→ ■ -)	D1	L1	B5	E5	G5	L	C5	F5	S5	Fig.
H.04.03	14	37.4	50	95	95	310	24.2	3.5	M6x15	A
H.05.03	14	37.4	60	75	95	310	24.2	3.5	M6x15	A
H.06.03	14	37.4	80	100	95	310	24.2	4	M6x15	A
H.07.02	14	37.4	60	75	95	310	24.2	3.5	M5x12	A
H.08.01	19	42	80	100	95	317	28	4	M6x15	A
H.08.02	19	41	80	100	120	316	27	4	M6x15	B
H.09.01	19	42	95	115	105	317	28	4	M8x18	A
H.09.02	19	42	95	115	120	317	28	4	M8x18	B
H.10.02	19	42	95	130	120	317	28	4	M8x18	B
H.11.02	19	42	110	130	120	317	28	4	M8x18	B
H.12.01	24	50	95	115	120	332	33.5	5	M8x18	B
H.13.01	24	50	95	130	120	332	33.5	5	M8x18	B
H.14.01	24	50	110	130	120	332	33.5	5	M8x18	B
H.15.01	24	51	110	165	143	333	35	5	M10x24	B
H.16.01	24	51	130	165	143	333	35	5	M10x24	B
H.16.03	24	51	130	165	140	333	35	5	M10x24	B
H.17.01	24	52	180	215	192	334	36	5	M10x24	B
H.18.01	28	60	130	165	143	340	45.5	5	M10x24	B
H.18.02	28	60	130	165	138	340	45.5	5	M10x24	B
H.19.01	28	60	180	215	192	340	45.5	5	M12x28	B
H.19.02	28	60	180	215	215	340	45.5	5	M12x28	B
H.32.02	14	37.4	60	82	95	310	24.2	3.5	M5x12	A

27781410/EN – 03/2022

			P6NG53							
Gear ratio			**200**	**245**	**250**	**280**	**350**	**400**	**500**	**700**
Short-time duty										
Peak torque	M_{a_pk}	Nm	480	480	480	480	480	480	480	480
Peak motor speed	n_{e_pk}	min^{-1}	6000	6000	6000	6000	6000	6000	6000	6000
Peak radial force	$F_{R_a_pk}$	N	2800	2800	2800	2800	2800	2800	2800	2800
Peak axial force	$F_{A_a_pk}$	N	6240	6240	6240	6240	6240	6240	6240	6240
Peak breakdown torque	$M_{K_a_pk}$	Nm	270	270	270	270	270	270	270	270
Continuous duty										
Nominal torque	M_{a_N}	Nm	295	325	295	325	325	360	365	300
Nominal motor speed	n_{e_N}	min^{-1}	4500	4500	4500	4500	4500	4500	4500	4500
Nominal radial force	$F_{R_a_N}$	N	2380	2380	2380	2380	2380	2380	2380	2380
Nominal axial force	$F_{A_a_N}$	N	5310	5310	5310	5310	5310	5310	5310	5310
Nominal breakdown torque	$M_{K_a_N}$	Nm	230	230	230	230	230	230	230	230
General technical data										
Torsional rigidity	c_{tr}	Nm/ arcmin	66	64	64	64	63	63	63	59
Rotational clearance	φ	arcmin	≤ 4 (R) – 6 (N)							
Pull-out rigidity	c_{pr}	Nm/ arcmin	37							
Service life	L	h	> 30000							
Cyclic duration factor	ED	%	≤ 100							
Gear unit temperature	T_{max}	°C	90							
Ambient temperature	T_{amb}	°C	-15 – +40							
Nominal ambient temperature	T_{amb_N}	°C	20							
Efficiency	η	%	93	93	93	93	93	93	93	93
Sound pressure level	L_P	dB (A)	≤ 57	≤ 57	≤ 57	≤ 57	≤ 57	≤ 57	≤ 57	≤ 57
Degree of protection	–	–	IP65							
No-load speed	M_{e_0}	Nm	0.23	0.20	0.20	0.18	0.15	0.14	0.12	0.09
Emergency stop torque	M_{a_es}	Nm	1350	1350	1350	1350	1350	1350	1350	1350
Mass moment of inertia incl. adapter										
Coupling Ø 14 mm	J	10^{-4} kgm^2	0.26	0.31	0.26	0.25	0.25	0.25	0.25	0.25
Coupling Ø 19 mm	J	10^{-4} kgm^2	0.49	0.53	0.48	0.48	0.48	0.48	0.48	0.48
Coupling Ø 24 mm	J	10^{-4} kgm^2	1.76	1.80	1.75	1.75	1.75	1.75	1.75	1.75
Coupling Ø 28 mm	J	10^{-4} kgm^2	2.31	2.36	2.31	2.31	2.31	2.30	2.30	2.30
Mass incl. adapter										
Coupling Ø min – max	m	kg	16.98 – 21.83							

27781410/EN – 03/2022

P6NG53..

57 074 00 19

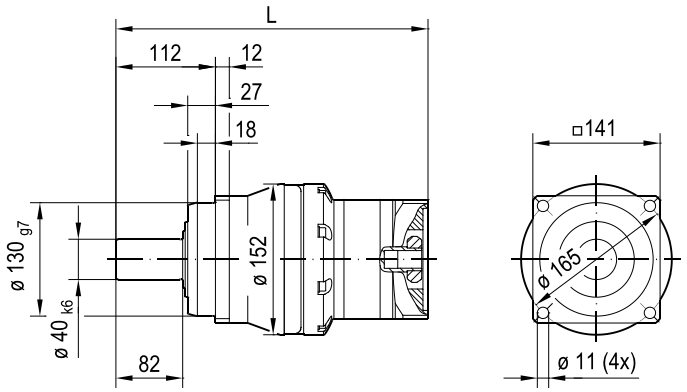

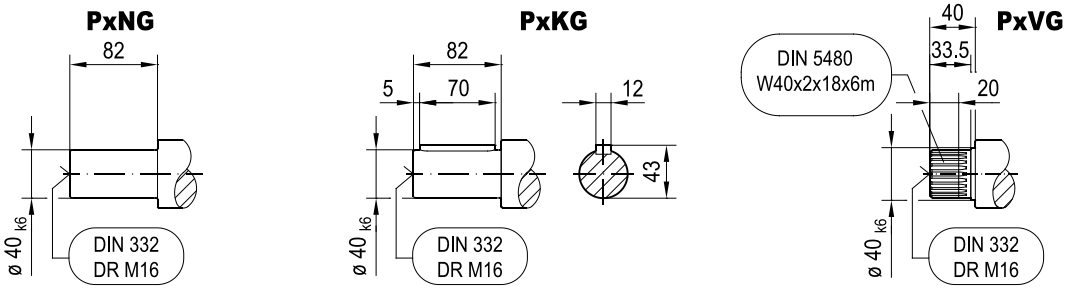

min. □ 95 Fig. A

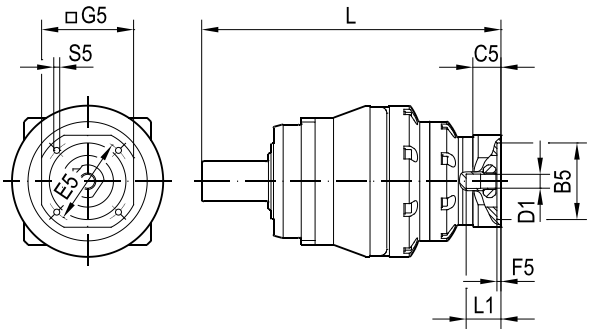

min. □ 120 Fig. B

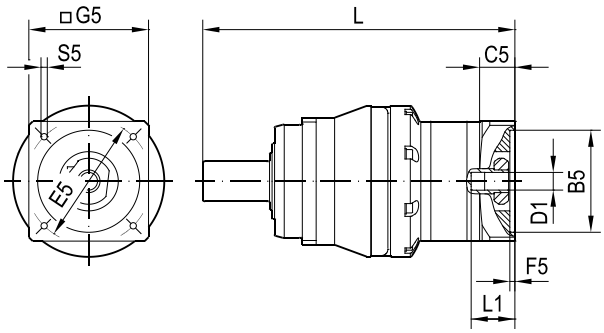

(→ ■ -)	D1	L1	B5	E5	G5	L	C5	F5	S5	Fig.
H.04.03	14	37.4	50	95	95	310	24.2	3.5	M6x15	A
H.05.03	14	37.4	60	75	95	310	24.2	3.5	M6x15	A
H.06.03	14	37.4	80	100	95	310	24.2	4	M6x15	A
H.07.02	14	37.4	60	75	95	310	24.2	3.5	M5x12	A
H.08.01	19	42	80	100	95	317	28	4	M6x15	A
H.08.02	19	41	80	100	120	316	27	4	M6x15	B
H.09.01	19	42	95	115	105	317	28	4	M8x18	A
H.09.02	19	42	95	115	120	317	28	4	M8x18	B
H.10.02	19	42	95	130	120	317	28	4	M8x18	B
H.11.02	19	42	110	130	120	317	28	4	M8x18	B
H.12.01	24	50	95	115	120	332	33.5	5	M8x18	B
H.13.01	24	50	95	130	120	332	33.5	5	M8x18	B
H.14.01	24	50	110	130	120	332	33.5	5	M8x18	B
H.15.01	24	51	110	165	143	333	35	5	M10x24	B
H.16.01	24	51	130	165	143	333	35	5	M10x24	B
H.16.03	24	51	130	165	140	333	35	5	M10x24	B
H.17.01	24	52	180	215	192	334	36	5	M10x24	B
H.18.01	28	60	130	165	143	340	45.5	5	M10x24	B
H.18.02	28	60	130	165	138	340	45.5	5	M10x24	B
H.19.01	28	60	180	215	192	340	45.5	5	M12x28	B
H.19.02	28	60	180	215	215	340	45.5	5	M12x28	B
H.32.02	14	37.4	60	82	95	310	24.2	3.5	M5x12	A

27781410/EN – 03/2022

			P6NG61				
Gear ratio			**3**	**4**	**5**	**7**	**10**
Short-time duty							
Peak torque	M_{a_pk}	Nm	700	880	880	880	700
Peak motor speed	n_{e_pk}	min^{-1}	3755	4380	5640	6000	6000
Peak radial force	$F_{R_a_pk}$	N	2100	2100	2100	2100	2100
Peak axial force	$F_{A_a_pk}$	N	5250	5250	5250	5250	5250
Peak breakdown torque	$M_{K_a_pk}$	Nm	205	205	205	205	205
Continuous duty							
Nominal torque	M_{a_N}	Nm	285	490	375	465	485
Nominal motor speed	n_{e_N}	min^{-1}	3000	3500	4500	4500	4500
Nominal radial force	$F_{R_a_N}$	N	1520	1590	1580	1760	1780
Nominal axial force	$F_{A_a_N}$	N	2850	3010	2970	3410	3940
Nominal breakdown torque	$M_{K_a_N}$	Nm	166	174	172	176	176
General technical data							
Torsional rigidity	c_{tr}	Nm/ arcmin	200	199	194	185	161
Rotational clearance	φ	arcmin	≤ 2 (R) – 4 (N)				
Pull-out rigidity	c_{pr}	Nm/ arcmin	61				
Service life	L	h	> 30000				
Cyclic duration factor	ED	%	≤ 100				
Gear unit temperature	T_{max}	°C	90				
Ambient temperature	T_{amb}	°C	-15 – +40				
Nominal ambient temperature	T_{amb_N}	°C	20				
Efficiency	η	%	99	99	99	99	99
Sound pressure level	L_P	dB (A)	≤ 62	≤ 62	≤ 62	≤ 62	≤ 62
Degree of protection	–	–	IP65				
No-load speed	M_{e_0}	Nm	3.80	3.00	2.30	1.80	1.60
Emergency stop torque	M_{a_es}	Nm	2640	2750	2750	2750	2640
Mass moment of inertia incl. adapter							
Coupling Ø 38 mm	J	10^{-4} kgm^2	47.19	28.03	21.11	14.46	11.03
Coupling Ø 48 mm	J	10^{-4} kgm^2	61.06	41.90	34.98	28.33	24.90
Coupling Ø 55 mm	J	10^{-4} kgm^2	87.95	68.79	61.87	55.51	52.09
Mass incl. adapter							
Coupling Ø min – max	m	kg	39.15 – 51.01				

27781410/EN – 03/2022

P6NG61..

57 051 00 19

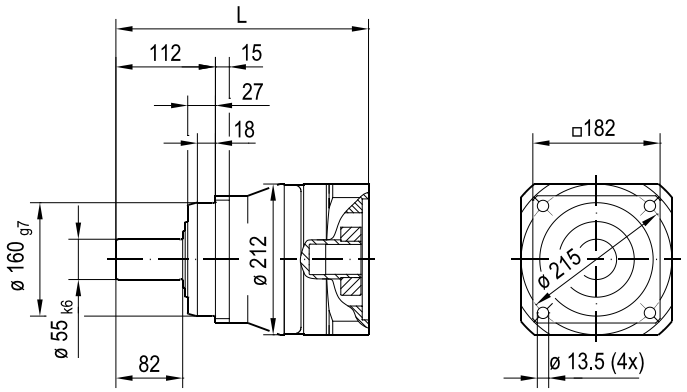

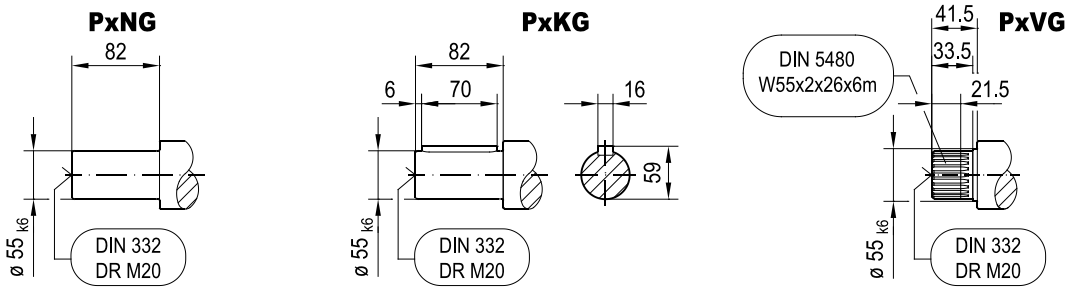

min. □ 215 Fig. B

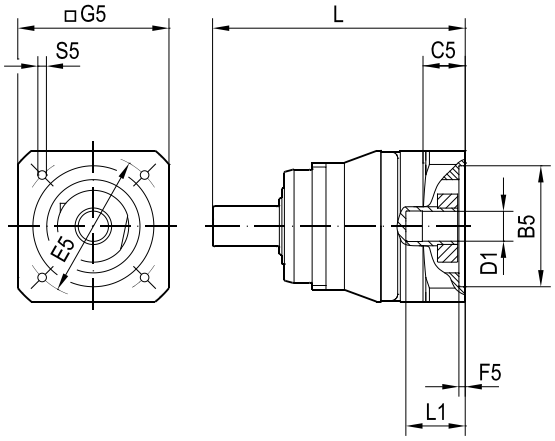

min. □ 260 Fig. C

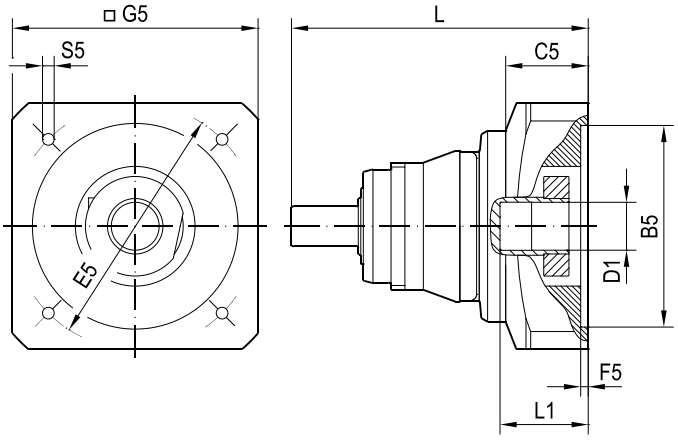

(→ -)	D1	L1	B5	E5	G5	L	C5	F5	S5	Fig.
H.24.02	38	80	114.3	200	215	322	57.5	5	M12x28	B
H.25.03	38	80	180	215	215	322	57.5	5	M12x28	B
H.26.02	38	80	230	265	240	322	57.5	5	M12x28	B
H.27.01	48	85	180	215	215	327	54.5	7	M12x28	B
H.28.01	48	110	230	265	240	352	79.5	7	M12x28	B
H.30.01	48	82	250	300	262	324	51.5	7	M16x36	B
H.31.01	55	110	300	350	316	358	72	7	M16x36	C
H.33.01	55	110	250	300	260	358	72	7	M16x36	C

27781410/EN – 03/2022

			P6NG62					
Gear ratio			**12**	**16**	**20**	**25**	**28**	**30**
Short-time duty								
Peak torque	M_{a_pk}	Nm	700	880	880	880	880	700
Peak motor speed	n_{e_pk}	min^{-1}	6000	6000	6000	6000	6000	6000
Peak radial force	$F_{R_a_pk}$	N	5010	5010	5010	5010	5010	5010
Peak axial force	$F_{A_a_pk}$	N	9990	9990	9990	9990	9990	9990
Peak breakdown torque	$M_{K_a_pk}$	Nm	545	545	545	545	545	545
Continuous duty								
Nominal torque	M_{a_N}	Nm	595	695	700	700	700	595
Nominal motor speed	n_{e_N}	min^{-1}	4500	4500	4500	4500	4500	4500
Nominal radial force	$F_{R_a_N}$	N	2570	2330	2510	2700	2800	3490
Nominal axial force	$F_{A_a_N}$	N	5390	4770	5220	5720	5990	7820
Nominal breakdown torque	$M_{K_a_N}$	Nm	280	250	270	290	305	380
General technical data								
Torsional rigidity	c_{tr}	Nm/ arcmin	206	216	213	211	207	187
Rotational clearance	φ	arcmin	≤ 4 (R) – 6 (N)					
Pull-out rigidity	c_{pr}	Nm/ arcmin	61					
Service life	L	h	> 30000					
Cyclic duration factor	ED	%	≤ 100					
Gear unit temperature	T_{max}	°C	90					
Ambient temperature	T_{amb}	°C	-15 – +40					
Nominal ambient temperature	T_{amb_N}	°C	20					
Efficiency	η	%	97	97	97	97	97	97
Sound pressure level	L_P	dB (A)	≤ 62	≤ 58	≤ 58	≤ 58	≤ 58	≤ 58
Degree of protection	–	–	IP65					
No-load speed	M_{e_0}	Nm	2.60	2.20	2.30	1.80	1.70	1.60
Emergency stop torque	M_{a_es}	Nm	2750	2750	2750	2750	2750	2750
Mass moment of inertia incl. adapter								
Coupling Ø 24 mm	J	10^{-4} kgm^2	7.78	6.59	4.88	4.61	3.35	2.70
Coupling Ø 32 mm	J	10^{-4} kgm^2	10.66	9.46	7.76	7.48	6.18	5.54
Coupling Ø 38 mm	J	10^{-4} kgm^2	13.64	12.44	10.74	10.46	9.21	8.47
Coupling Ø 48 mm	J	10^{-4} kgm^2	27.51	26.32	24.61	24.34	23.07	22.44
Mass incl. adapter								
Coupling Ø min – max	m	kg	39.49 – 51.69					

27781410/EN – 03/2022

P6NG62..

57 052 00 19

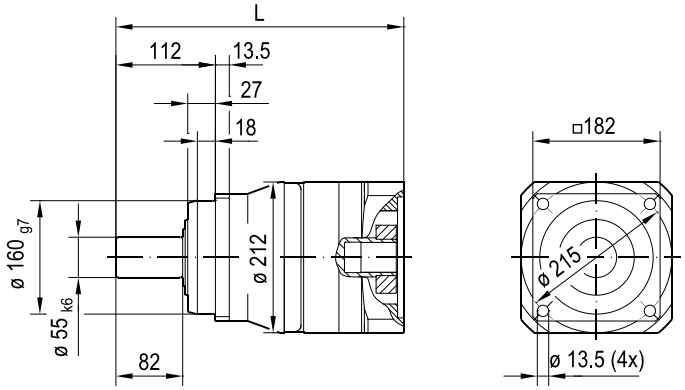

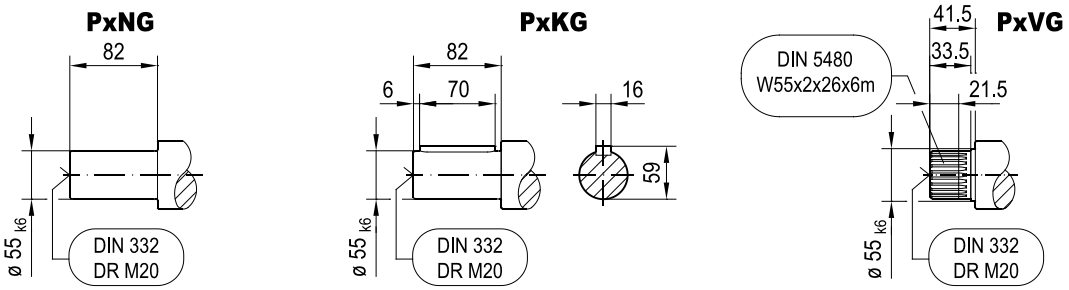

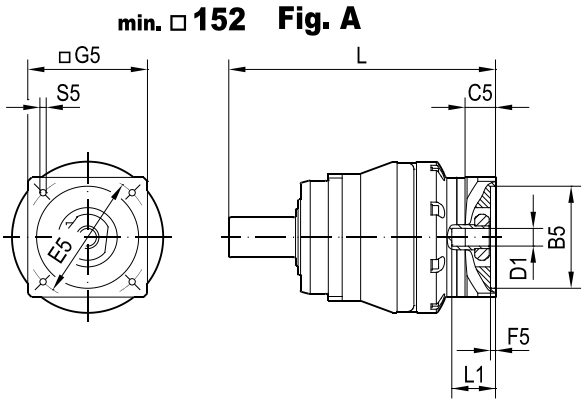

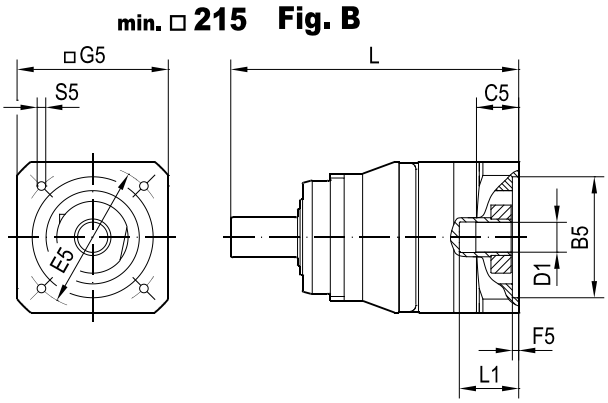

(→ ■ -)	D1	L1	B5	E5	G5	L	C5	F5	S5	Fig.
H.12.02	24	50	95	115	152	337	34.5	5	M8x18	A
H.13.02	24	50	95	130	152	337	34.5	5	M8x18	A
H.14.02	24	50	110	130	152	337	34.5	5	M8x18	A
H.15.02	24	50	110	165	152	337	35	5	M10x24	A
H.16.02	24	50	130	165	152	337	35	5	M10x24	A
H.17.02	24	50	180	215	192	337	35	5	M10x24	A
H.20.01	32	65	130	165	152	349	43	5	M10x24	A
H.21.01	32	65	130	215	192	349	43	5	M12x28	A
H.22.01	32	62	155	190	163	346	40	5	M10x24	A
H.23.01	32	65	180	215	190	349	43	5	M12x28	A
H.23.02	32	65	180	215	215	349	43	5	M12x28	A
H.24.01	38	80	114.3	200	180	365	58.5	5	M12x28	A
H.24.02	38	80	114.3	200	215	371	57.5	5	M12x28	B
H.25.01	38	80	180	215	192	365	58.5	5	M12x28	A
H.25.03	38	80	180	215	215	371	57.5	5	M12x28	B
H.25.04	38	80	180	215	190	365	58.5	5	M12x28	A
H.26.02	38	80	230	265	240	371	57.5	5	M12x28	B
H.27.01	48	85	180	215	215	376	54.5	7	M12x28	B
H.28.01	48	110	230	265	240	401	79.5	7	M12x28	B
H.30.01	48	82	250	300	262	373	51.5	7	M16x36	B

27781410/EN – 03/2022

			P6NG62				
Gear ratio			**35**	**40**	**50**	**70**	**100**
Short-time duty							
Peak torque	M_{a_pk}	Nm	880	880	880	880	700
Peak motor speed	n_{e_pk}	min^{-1}	6000	6000	6000	6000	6000
Peak radial force	$F_{R_a_pk}$	N	5010	5010	5010	5010	5010
Peak axial force	$F_{A_a_pk}$	N	9990	9990	9990	9990	9990
Peak breakdown torque	$M_{K_a_pk}$	Nm	545	545	545	545	545
Continuous duty							
Nominal torque	M_{a_N}	Nm	700	700	700	700	560
Nominal motor speed	n_{e_N}	min^{-1}	4500	4500	4500	4500	4500
Nominal radial force	$F_{R_a_N}$	N	3020	3160	3400	3810	4260
Nominal axial force	$F_{A_a_N}$	N	6560	6920	7580	8490	8490
Nominal breakdown torque	$M_{K_a_N}$	Nm	325	340	370	415	460
General technical data							
Torsional rigidity	c_{tr}	Nm/ arcmin	207	200	202	190	174
Rotational clearance	φ	arcmin	≤ 4 (R) – 6 (N)				
Pull-out rigidity	c_{pr}	Nm/ arcmin	61				
Service life	L	h	> 30000				
Cyclic duration factor	ED	%	≤ 100				
Gear unit temperature	T_{max}	°C	90				
Ambient temperature	T_{amb}	°C	-15 – +40				
Nominal ambient temperature	T_{amb_N}	°C	20				
Efficiency	η	%	97	97	97	97	97
Sound pressure level	L_P	dB (A)	≤ 58	≤ 58	≤ 58	≤ 58	≤ 58
Degree of protection	–	–	IP65				
No-load speed	M_{e_0}	Nm	1.40	1.20	1.20	0.95	1.00
Emergency stop torque	M_{a_es}	Nm	2750	2750	2750	2750	2640
Mass moment of inertia incl. adapter							
Coupling Ø 24 mm	J	10^{-4} kgm^2	3.21	2.51	2.44	2.37	2.34
Coupling Ø 32 mm	J	10^{-4} kgm^2	6.04	5.35	5.28	5.21	5.18
Coupling Ø 38 mm	J	10^{-4} kgm^2	9.06	8.27	8.20	8.14	8.10
Coupling Ø 48 mm	J	10^{-4} kgm^2	22.93	22.25	22.18	22.12	22.08
Mass incl. adapter							
Coupling Ø min – max	m	kg	39.49 – 51.69				

27781410/EN – 03/2022

P6NG62..

57 052 00 19

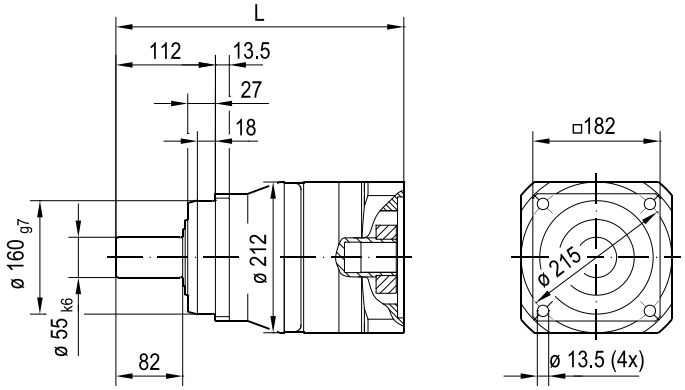

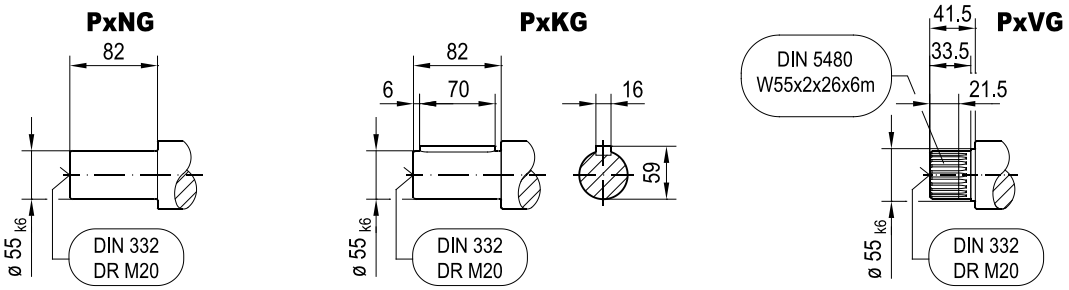

min. □ 152 Fig. A

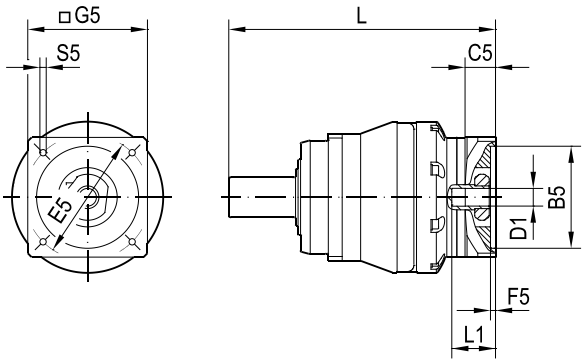

min. □ 215 Fig. B

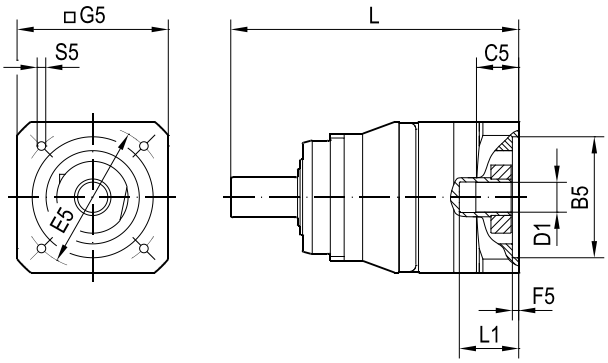

(→ ■ -)	D1	L1	B5	E5	G5	L	C5	F5	S5	Fig.
H.12.02	24	50	95	115	152	337	34.5	5	M8x18	A
H.13.02	24	50	95	130	152	337	34.5	5	M8x18	A
H.14.02	24	50	110	130	152	337	34.5	5	M8x18	A
H.15.02	24	50	110	165	152	337	35	5	M10x24	A
H.16.02	24	50	130	165	152	337	35	5	M10x24	A
H.17.02	24	50	180	215	192	337	35	5	M10x24	A
H.20.01	32	65	130	165	152	349	43	5	M10x24	A
H.21.01	32	65	130	215	192	349	43	5	M12x28	A
H.22.01	32	62	155	190	163	346	40	5	M10x24	A
H.23.01	32	65	180	215	190	349	43	5	M12x28	A
H.23.02	32	65	180	215	215	349	43	5	M12x28	A
H.24.01	38	80	114.3	200	180	365	58.5	5	M12x28	A
H.24.02	38	80	114.3	200	215	371	57.5	5	M12x28	B
H.25.01	38	80	180	215	192	365	58.5	5	M12x28	A
H.25.03	38	80	180	215	215	371	57.5	5	M12x28	B
H.25.04	38	80	180	215	190	365	58.5	5	M12x28	A
H.26.02	38	80	230	265	240	371	57.5	5	M12x28	B
H.27.01	48	85	180	215	215	376	54.5	7	M12x28	B
H.28.01	48	110	230	265	240	401	79.5	7	M12x28	B
H.30.01	48	82	250	300	262	373	51.5	7	M16x36	B

27781410/EN – 03/2022

			P6NG71				
Gear ratio			**3**	**4**	**5**	**7**	**10**
Short-time duty							
Peak torque	M_{a_pk}	Nm	1200	2000	2000	1700	1200
Peak motor speed	n_{e_pk}	min^{-1}	3370	3645	4705	4925	4925
Peak radial force	$F_{R_a_pk}$	N	2620	2620	2620	2620	2620
Peak axial force	$F_{A_a_pk}$	N	8400	8400	8400	8400	8400
Peak breakdown torque	$M_{K_a_pk}$	Nm	310	310	310	310	310
Continuous duty							
Nominal torque	M_{a_N}	Nm	960	1260	1140	1160	960
Nominal motor speed	n_{e_N}	min^{-1}	2250	2500	3500	3500	3500
Nominal radial force	$F_{R_a_N}$	N	2030	2150	2070	2230	2230
Nominal axial force	$F_{A_a_N}$	N	4090	4400	4200	4820	5570
Nominal breakdown torque	$M_{K_a_N}$	Nm	250	260	255	260	260
General technical data							
Torsional rigidity	c_{tr}	Nm/ arcmin	384	410	408	361	330
Rotational clearance	φ	arcmin	≤ 2 (R) – 4 (N)				
Pull-out rigidity	c_{pr}	Nm/ arcmin	94				
Service life	L	h	> 30000				
Cyclic duration factor	ED	%	≤ 100				
Gear unit temperature	T_{max}	°C	90				
Ambient temperature	T_{amb}	°C	-15 – +40				
Nominal ambient temperature	T_{amb_N}	°C	20				
Efficiency	η	%	99	99	99	99	99
Sound pressure level	L_P	dB (A)	≤ 64	≤ 64	≤ 64	≤ 64	≤ 64
Degree of protection	–	–	IP65				
No-load speed	M_{e_0}	Nm	5.50	4.90	4.60	4.00	3.60
Emergency stop torque	M_{a_es}	Nm	5900	5900	5900	5900	5790
Mass moment of inertia incl. adapter							
Coupling Ø 55 mm	J	10^{-4} kgm^2	156.44	104.06	85.82	66.70	57.87
Mass incl. adapter							
Coupling Ø min – max	m	kg	67.77 – 68.30				

27781410/EN – 03/2022

P6NG71..

57 053 00 19

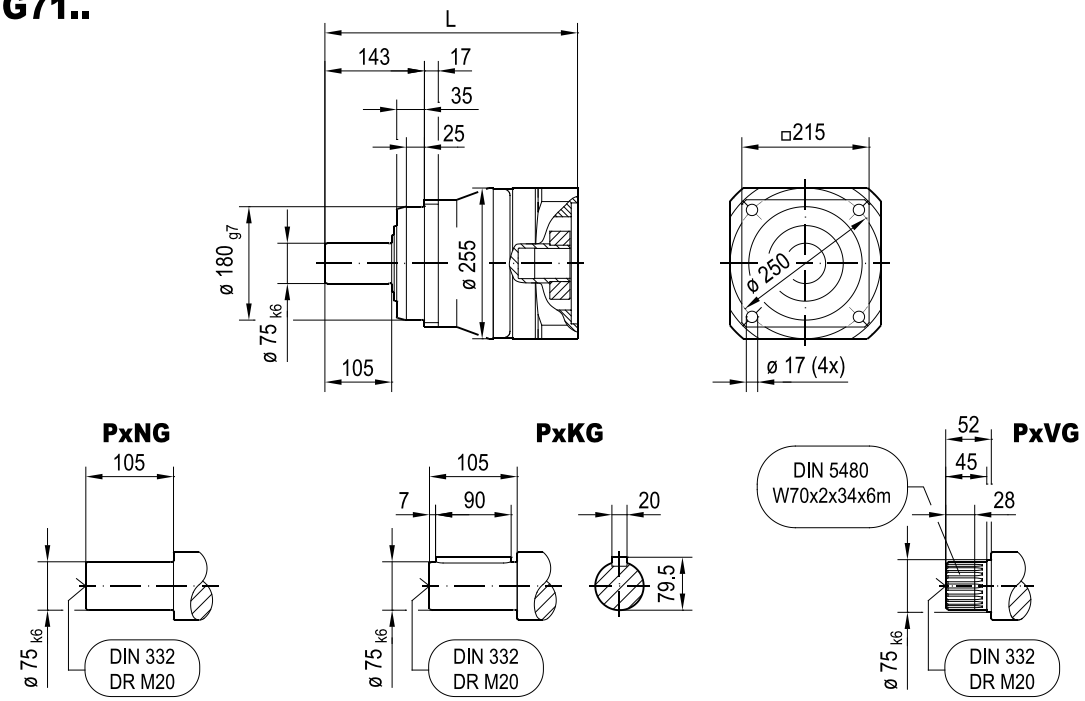

min. □ 260 Fig. B

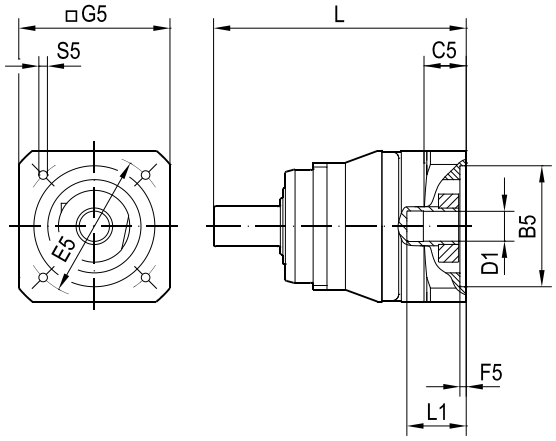

(→ ■ -)	D1	L1	B5	E5	G5	L	C5	F5	S5	Fig.
H.31.01	55	110	300	350	316	399	72	7	M16x36	B
H.33.01	55	110	250	300	260	399	72	7	M16x36	B

27781410/EN – 03/2022

			P6NG72					
Gear ratio			**12**	**16**	**20**	**25**	**28**	**30**
Short-time duty								
Peak torque	M_{a_pk}	Nm	1680	1680	1800	2000	1680	1680
Peak motor speed	n_{e_pk}	min^{-1}	4380	4380	5640	5640	6000	6000
Peak radial force	$F_{R_a_pk}$	N	6340	6340	6340	6340	6340	6340
Peak axial force	$F_{A_a_pk}$	N	13400	13400	13400	13400	13400	13400
Peak breakdown torque	$M_{K_a_pk}$	Nm	790	790	790	790	790	790
Continuous duty								
Nominal torque	M_{a_N}	Nm	890	890	725	910	740	890
Nominal motor speed	n_{e_N}	min^{-1}	3500	3500	4380	4500	4500	3500
Nominal radial force	$F_{R_a_N}$	N	3350	3060	3060	3260	3390	4550
Nominal axial force	$F_{A_a_N}$	N	7530	6740	6740	7300	7640	10900
Nominal breakdown torque	$M_{K_a_N}$	Nm	415	380	380	405	420	565
General technical data								
Torsional rigidity	c_{tr}	Nm/ arcmin	444	460	461	447	457	423
Rotational clearance	φ	arcmin	≤ 4 (R) – 5 (N)					
Pull-out rigidity	c_{pr}	Nm/ arcmin	94					
Service life	L	h	> 30000					
Cyclic duration factor	ED	%	≤ 100					
Gear unit temperature	T_{max}	°C	90					
Ambient temperature	T_{amb}	°C	-15 – +40					
Nominal ambient temperature	T_{amb_N}	°C	20					
Efficiency	η	%	97	97	97	97	97	97
Sound pressure level	L_P	dB (A)	≤ 64	≤ 57	≤ 57	≤ 57	≤ 57	≤ 57
Degree of protection	–	–	IP65					
No-load speed	M_{e_0}	Nm	3.80	3.40	3.10	2.90	2.60	2.50
Emergency stop torque	M_{a_es}	Nm	5900	5900	5900	5900	5900	5900
Mass moment of inertia incl. adapter								
Coupling Ø 38 mm	J	10^{-4} kgm^2	29.22	25.94	19.78	19.05	13.83	11.25
Coupling Ø 48 mm	J	10^{-4} kgm^2	43.08	39.81	33.65	32.92	27.70	25.11
Coupling Ø 55 mm	J	10^{-4} kgm^2	69.98	66.70	60.54	59.81	54.88	52.30
Mass incl. adapter								
Coupling Ø min – max	m	kg	71.55 – 84.46					

27781410/EN – 03/2022

P6NG72..

57 054 00 19

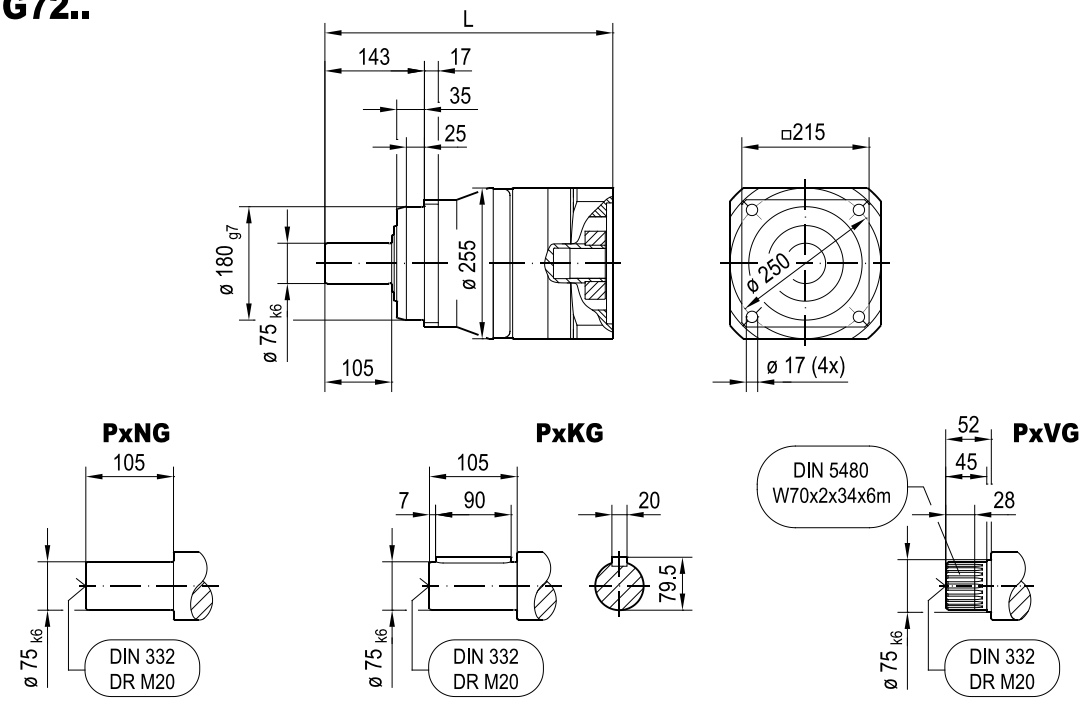

min. □ 215 Fig. A

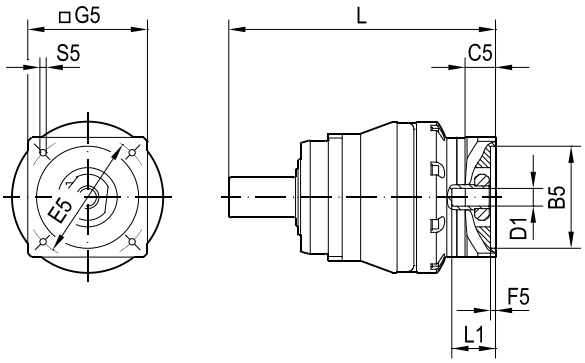

min. □ 260 Fig. B

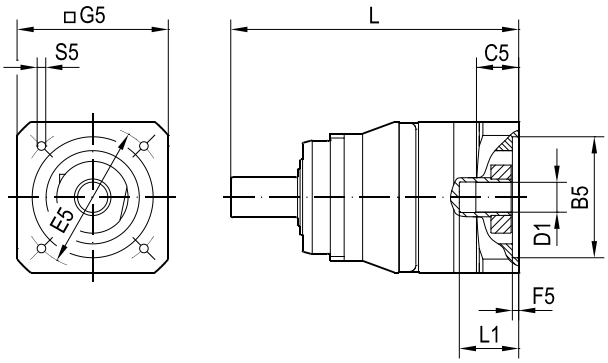

(→ -)	D1	L1	B5	E5	G5	L	C5	F5	S5	Fig.
H.24.02	38	80	114.3	200	215	445	57.5	5	M12x28	A
H.25.03	38	80	180	215	215	445	57.5	5	M12x28	A
H.26.02	38	80	230	265	240	445	57.5	5	M12x28	A
H.27.01	48	85	180	215	215	450	54.5	7	M12x28	A
H.28.01	48	110	230	265	240	475	79.5	7	M12x28	A
H.30.01	48	82	250	300	262	447	51.5	7	M16x36	A
H.31.01	55	110	300	350	316	481	72	7	M16x36	B
H.33.01	55	110	250	300	260	481	72	7	M16x36	B

27781410/EN – 03/2022

			P6NG72				
Gear ratio			**35**	**40**	**50**	**70**	**100**
Short-time duty							
Peak torque	M_{a_pk}	Nm	1920	1040	1300	1700	1200
Peak motor speed	n_{e_pk}	min^{-1}	6000	6000	6000	6000	6000
Peak radial force	$F_{R_a_pk}$	N	6340	6340	6340	6340	6340
Peak axial force	$F_{A_a_pk}$	N	13400	13400	13400	13400	13400
Peak breakdown torque	$M_{K_a_pk}$	Nm	790	790	790	790	790
Continuous duty							
Nominal torque	M_{a_N}	Nm	920	785	980	1360	960
Nominal motor speed	n_{e_N}	min^{-1}	4500	4500	4500	4500	4500
Nominal radial force	$F_{R_a_N}$	N	3650	3820	4110	4600	5190
Nominal axial force	$F_{A_a_N}$	N	8370	8840	9680	11000	11400
Nominal breakdown torque	$M_{K_a_N}$	Nm	455	475	510	575	645
General technical data							
Torsional rigidity	c_{tr}	Nm/ arcmin	446	446	440	398	368
Rotational clearance	φ	arcmin	≤ 4 (R) – 5 (N)				
Pull-out rigidity	c_{pr}	Nm/ arcmin	94				
Service life	L	h	> 30000				
Cyclic duration factor	ED	%	≤ 100				
Gear unit temperature	T_{max}	°C	90				
Ambient temperature	T_{amb}	°C	-15 – +40				
Nominal ambient temperature	T_{amb_N}	°C	20				
Efficiency	η	%	97	97	97	97	97
Sound pressure level	L_P	dB (A)	≤ 57	≤ 57	≤ 57	≤ 57	≤ 57
Degree of protection	–	–	IP65				
No-load speed	M_{e_0}	Nm	2.00	2.00	1.80	1.60	1.60
Emergency stop torque	M_{a_es}	Nm	5900	5900	5900	5900	5790
Mass moment of inertia incl. adapter							
Coupling Ø 38 mm	J	10^{-4} kgm^2	13.45	10.72	10.54	10.31	10.23
Coupling Ø 48 mm	J	10^{-4} kgm^2	27.33	24.59	24.41	24.18	24.09
Coupling Ø 55 mm	J	10^{-4} kgm^2	54.51	51.78	51.60	51.37	51.28
Mass incl. adapter							
Coupling Ø min – max	m	kg	71.55 – 84.46				

27781410/EN – 03/2022

P6NG72..

57 054 00 19

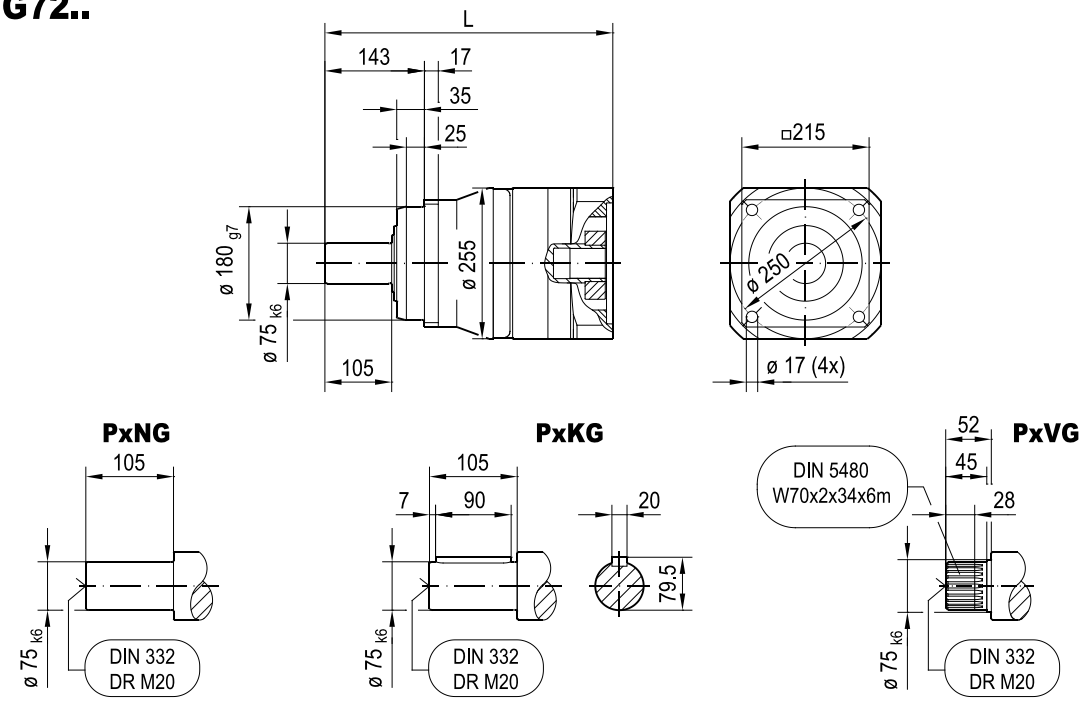

min. □ 215 Fig. A

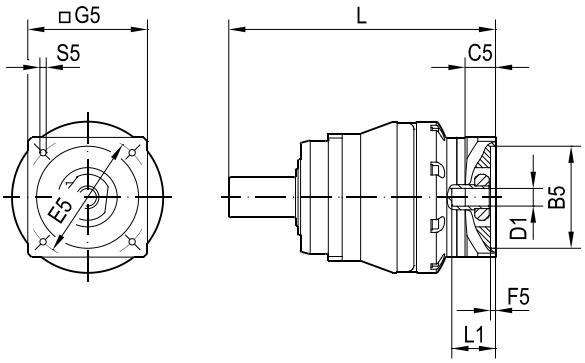

min. □ 260 Fig. B

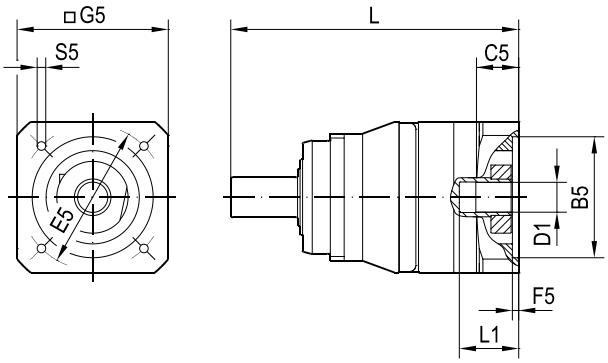

(→ -)	D1	L1	B5	E5	G5	L	C5	F5	S5	Fig.
H.24.02	38	80	114.3	200	215	445	57.5	5	M12x28	A
H.25.03	38	80	180	215	215	445	57.5	5	M12x28	A
H.26.02	38	80	230	265	240	445	57.5	5	M12x28	A
H.27.01	48	85	180	215	215	450	54.5	7	M12x28	A
H.28.01	48	110	230	265	240	475	79.5	7	M12x28	A
H.30.01	48	82	250	300	262	447	51.5	7	M16x36	A
H.31.01	55	110	300	350	316	481	72	7	M16x36	B
H.33.01	55	110	250	300	260	481	72	7	M16x36	B

27781410/EN – 03/2022

5 Servo gear units of the type P7.G

The servo gear units in performance class 7 are especially suitable for applications in intermittent duty and with limited space.

The modified output stage ensures a high overload capacity.

Gear units in performance class 7 have the following, outstanding properties:

- Precision

  Top quality in the application due to precision

- Overload capacity

  High level of safety in the application due to high overload capacity

- Compact design

  Increased peak torques – up to 30% higher torques as compared to the standard design

The following output design is available for servo gear units of the type P7.G:

- B: Flange block (without index bore)

SEW-EURODRIVE
76646 Bruchsal / Germany
Made in Germany

Sample depiction of the torque characteristic (nominal torque to peak torque) in performance class 7. Flange block, 1-stage i = 5.5, 2-stage i = 27.5.

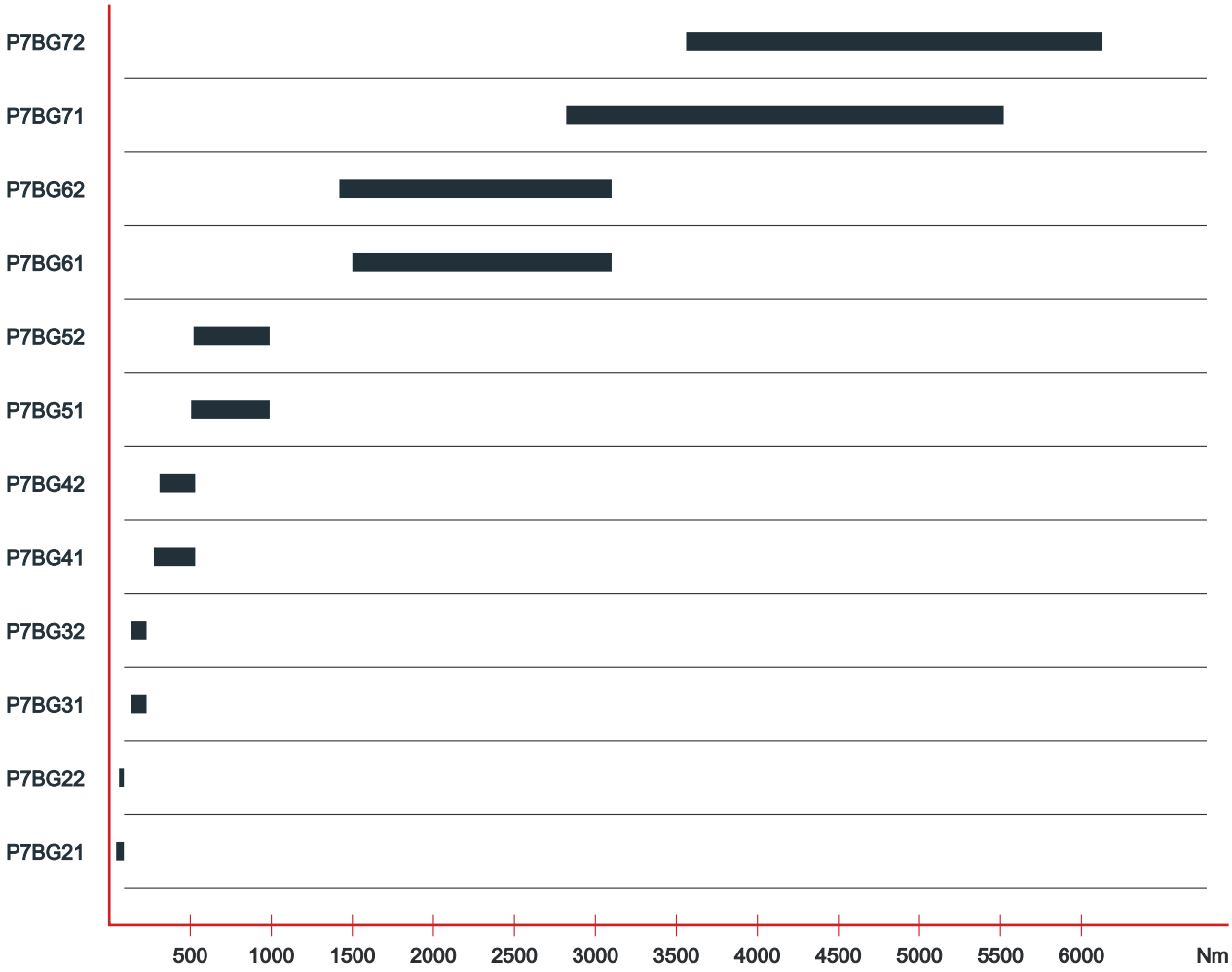

The permitted speeds are between 4500 and 6000 min^{-1}. For detailed information, refer to the technical data. (▸ 204)

27781410/EN – 03/2022

5.1 Possible use and target applications

5.1.1 Laser cutting machine

When sheet metal needs to be cut into various shapes quickly and precisely, 2D laser cutting machines are being used. The highly precise and powerful planetary servo gear units of the type P7.G ensure the required motion sequence.

Features of P7.G

- Maximum precision for the highest possible cutting quality
- High overload capacity for short cycle times
- High torque density despite the compact design

Your benefits

- Possible use of various servomotors due to the high degree of flexibility in the adapter interface
- High accuracy provided by the precise gear units in the standard design, even during rapid changes of direction and at inversion points during contour machining
- Compact machine structures and quick acceleration can be realized
- Processing steps that are optimized for speed and force application due to the finely stepped gear unit reduction ratios

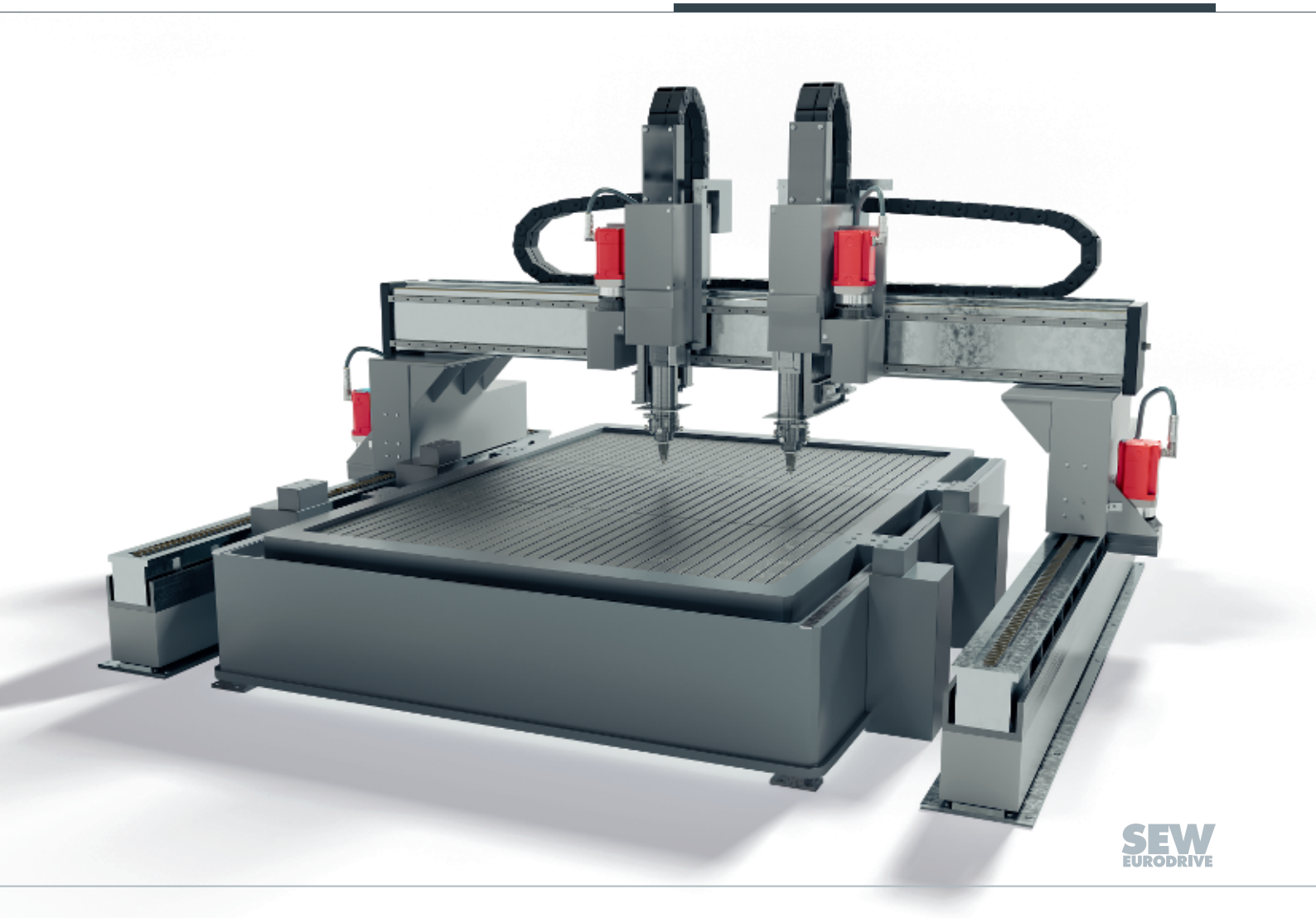

5.1.2 Delta kinematics

Pick and place applications imply high-speed handling and robotic functionality that allow for free motion within a defined work envelope, and are performed with precision and high dynamics of up to 200 picks per minute. With their excellent properties, planetary servo gear units of the type P7.G provide you with an ideal solution for these tasks.

Features of P7.G

- Maximum precision for the highest possible positioning accuracy
- Highest torque density for compact designs
- High overload capacity for quick acceleration and short cycle times

Your benefits

- Easy to integrate into the robot thanks to the exceptionally compact design
- The precision that our gear units already provide in the standard design, facilitates a high repeat accuracy and exact positioning, even at speeds as fast as 200 positioning tasks per minute
- High control quality is obtained due to the extremely high torsional rigidity of the short design
- High speeds are facilitated by the small reduction ratio defined in the operating principle

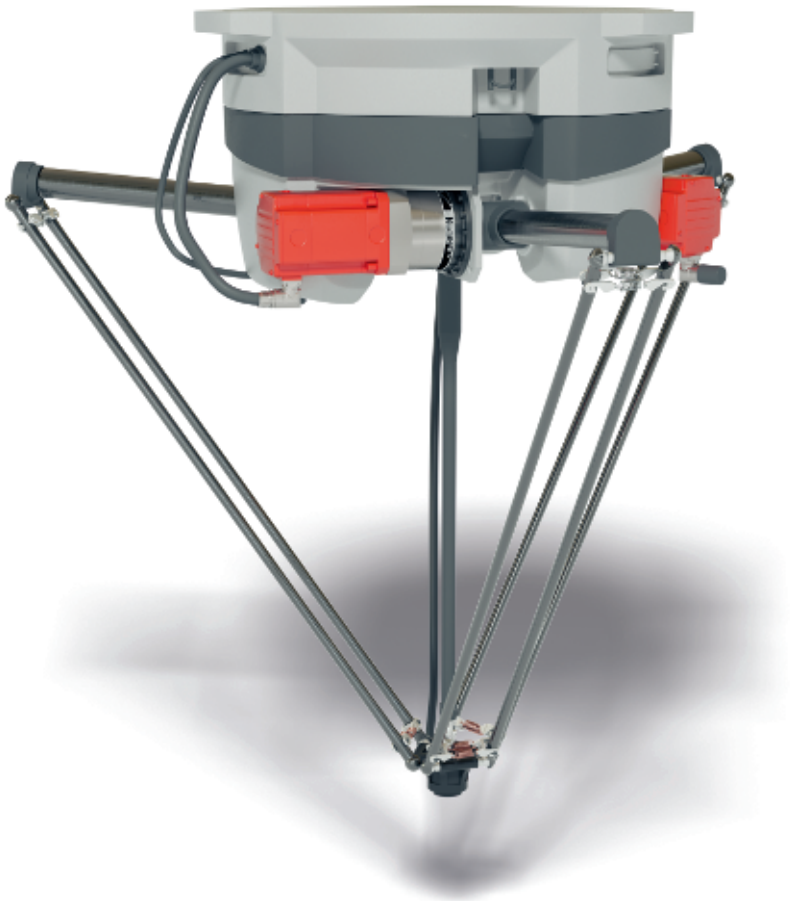

5.1.3 Chain magazine and tool changer

A chain magazine includes various tools that are taken from a transfer tool holder and placed into the machine tool. In order to achieve the shortest possible "chip-to-chip times", synchronized positioning movements are required, while high precision and a large overload capacity are ensured at the same time. With planetary servo gear units of the type P7.G, you will be able to achieve the highest possible power rating.

Features of P7.G

- High torque density for large overload capacity and safe operation
- Maximum precision for safe motion sequences
- Compact design for efficient machine structures

Your benefits

- Easy to integrate into the tool changer thanks to the exceptionally compact design
- "Chip-to-chip time" reduced to a minimum due to the very quick tool change that is facilitated by the gear unit's high overload capacity

5.2 Technical data and dimension sheets

For further information regarding the technical data and dimension sheets, refer to chapter "Appendix" (▶ 261).

			P7BG21	
Gear ratio			**4**	**5.5**
Short-time duty				
Peak torque	M_{a_pk}	Nm	90	88
Peak motor speed	n_{e_pk}	min^{-1}	5600	7000
Peak radial force	$F_{R_a_pk}$	N	2200	2200
Peak axial force	$F_{A_a_pk}$	N	2300	2300
Peak breakdown torque	$M_{K_a_pk}$	Nm	125	125
Continuous duty				
Nominal torque	M_{a_N}	Nm	42	42
Nominal motor speed	n_{e_N}	min^{-1}	3500	3500
Nominal radial force	$F_{R_a_N}$	N	1320	1450
Nominal axial force	$F_{A_a_N}$	N	1950	1950
Nominal breakdown torque	$M_{K_a_N}$	Nm	76	83
General technical data				
Torsional rigidity	c_{tr}	Nm/ arcmin	18	15
Rotational clearance	φ	arcmin	≤ 2 (R) – 4 (N)	
Pull-out rigidity	c_{pr}	Nm/ arcmin	112	
Service life	L	h	> 20000	
Cyclic duration factor	ED	%	≤ 60	
Gear unit temperature	T_{max}	°C	90	
Ambient temperature	T_{amb}	°C	-15 – +40	
Nominal ambient temperature	T_{amb_N}	°C	20	
Efficiency	η	%	98	98
Sound pressure level	L_P	dB (A)	≤ 58	≤ 58
Degree of protection	–	–	IP65	
No-load speed	M_{e_0}	Nm	0.67	0.60
Emergency stop torque	M_{a_es}	Nm	100	100
Mass moment of inertia incl. adapter				
Coupling Ø 11 mm	J	10^{-4} kgm^2	0.16	0.11
Coupling Ø 14 mm	J	10^{-4} kgm^2	0.30	0.26
Coupling Ø 19 mm	J	10^{-4} kgm^2	0.53	0.48
Mass incl. adapter				
Coupling Ø min – max	m	kg	1.29 – 2.22	

27781410/EN – 03/2022

P7BG21..

57 045 00 19

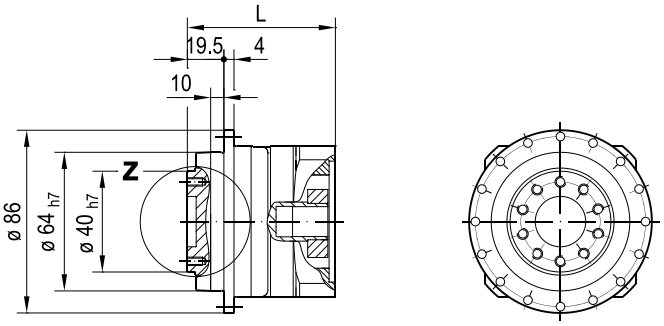

PxBG

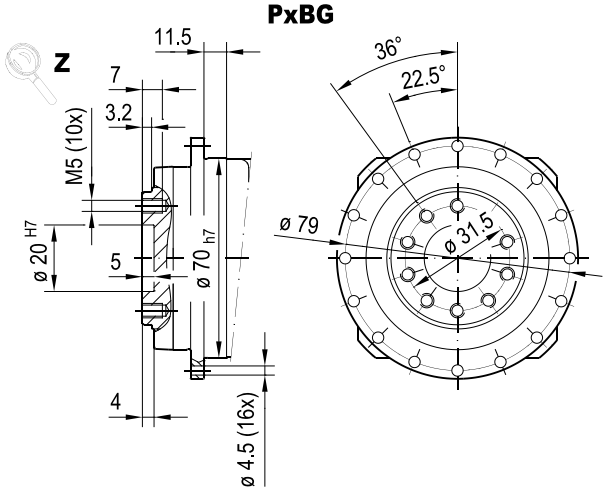

min. □ 73 **Fig. B**

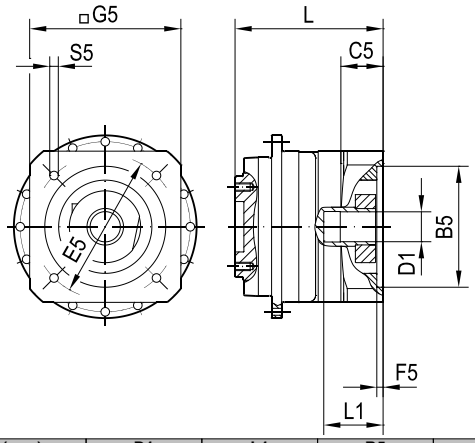

min. □ 95 **Fig. C**

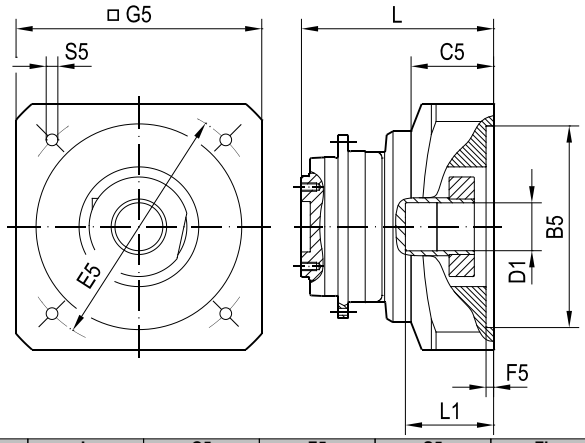

(→)	D1	L1	B5	E5	G5	L	C5	F5	S5	Fig.
H.01.02	11	37.6	40	63	73	78	22.3	0	M4x12	B
H.02.03	11	37.6	60	75	73	78	22.3	3.5	M5x12	B
H.03.02	11	37.6	60	90	73	78	22.3	3.5	M5x12	B
H.04.02	14	37.4	50	95	95	81	25.2	3.5	M6x15	B
H.05.02	14	37.4	60	75	73	81	25.2	3.5	M6x15	B
H.06.02	14	37.4	80	100	95	81	25.2	4	M6x15	B
H.06.05	14	37.4	80	100	88	81	25.2	4	M6x15	B
H.07.01	14	37.4	60	75	73	81	25.2	3.5	M5x12	B
H.08.01	19	42	80	100	95	88	28	4	M6x15	C
H.09.01	19	42	95	115	105	88	28	4	M8x18	C
H.10.01	19	42	95	130	120	88	28	4	M8x18	C
H.11.01	19	42	110	130	120	88	28	4	M8x18	C
H.32.01	14	37.4	60	82	73	81	25.2	3.5	M5x12	B

27781410/EN – 03/2022

			P7BG22							
Gear ratio			**16**	**20**	**22**	**27.5**	**28**	**38.5**	**40**	**55**
Short-time duty										
Peak torque	M_{a_pk}	Nm	90	90	88	88	90	88	90	88
Peak motor speed	n_{e_pk}	min^{-1}	7500	7500	7500	7500	7500	7500	7500	7500
Peak radial force	$F_{R_a_pk}$	N	2200	2200	2200	2200	2200	2200	2200	2200
Peak axial force	$F_{A_a_pk}$	N	2300	2300	2300	2300	2300	2300	2300	2300
Peak breakdown torque	$M_{K_a_pk}$	Nm	125	125	125	125	125	125	125	125
Continuous duty										
Nominal torque	M_{a_N}	Nm	61	60	61	61	60	61	61	61
Nominal motor speed	n_{e_N}	min^{-1}	4500	4500	4500	4500	4500	4500	4500	4500
Nominal radial force	$F_{R_a_N}$	N	1860	1870	1870	1870	1870	1870	1870	1870
Nominal axial force	$F_{A_a_N}$	N	1950	1950	1950	1950	1950	1950	1950	1950
Nominal breakdown torque	$M_{K_a_N}$	Nm	106	106	106	106	106	106	106	106
General technical data										
Torsional rigidity	c_{tr}	Nm/ arcmin	20	20	17	16	19	16	17	16
Rotational clearance	φ	arcmin	≤ 2 (R) – 4 (N)							
Pull-out rigidity	c_{pr}	Nm/ arcmin	112							
Service life	L	h	> 20000							
Cyclic duration factor	ED	%	≤ 60							
Gear unit temperature	T_{max}	°C	90							
Ambient temperature	T_{amb}	°C	-15 – +40							
Nominal ambient temperature	T_{amb_N}	°C	20							
Efficiency	η	%	94	94	94	94	94	94	94	94
Sound pressure level	L_P	dB (A)	≤ 57	≤ 57	≤ 57	≤ 57	≤ 57	≤ 57	≤ 57	≤ 57
Degree of protection	–	–	IP65							
No-load speed	M_{e_0}	Nm	0.34	0.28	0.26	0.26	0.25	0.22	0.22	0.20
Emergency stop torque	M_{a_es}	Nm	100	100	100	100	100	100	100	100
Mass moment of inertia incl. adapter										
Coupling Ø 11 mm	J	10^{-4} kgm^2	0.10	0.09	0.10	0.09	0.07	0.07	0.07	0.07
Coupling Ø 14 mm	J	10^{-4} kgm^2	0.25	0.23	0.24	0.23	0.22	0.22	0.21	0.21
Mass incl. adapter										
Coupling Ø min – max	m	kg	1.75 – 2.12							

27781410/EN – 03/2022

P7BG22..

57 046 00 19

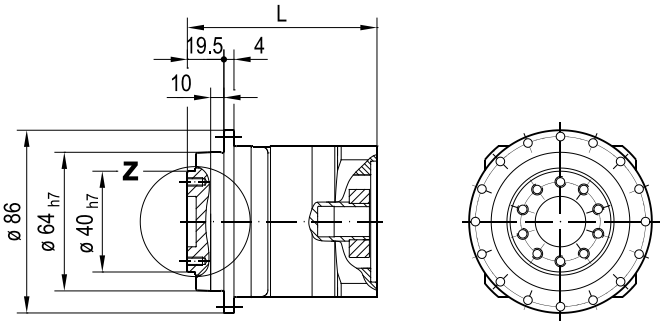

PxBG

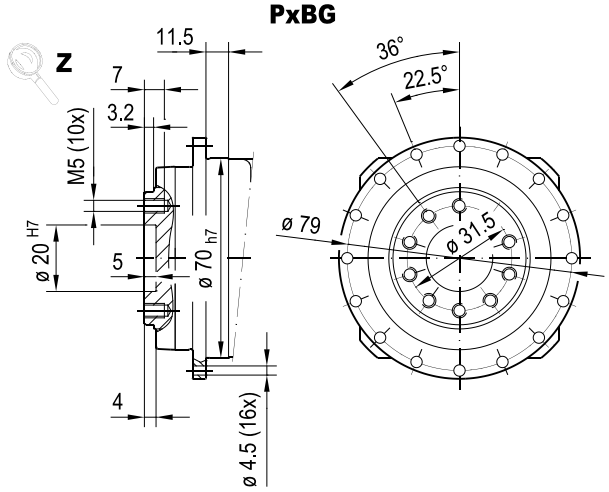

min. □ 55 **Fig. A**

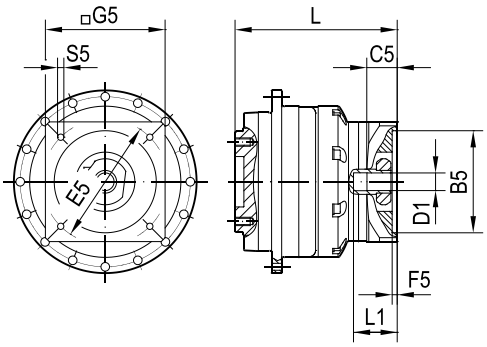

min. □ 73 **Fig. B**

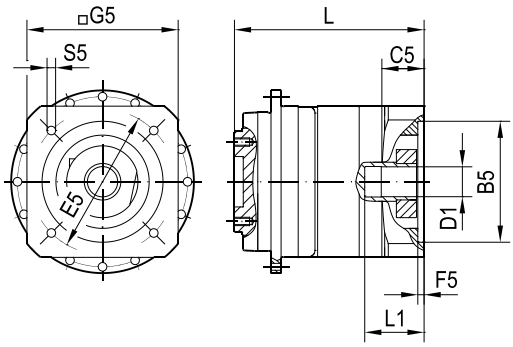

(→)	D1	L1	B5	E5	G5	L	C5	F5	S5	Fig.
H.01.03	11	37.6	40	63	55	101	19.7	3.5	M4x12	A
H.02.04	11	37.6	60	75	62	101	19.7	3.5	M5x12	A
H.02.05	11	37.6	60	75	73	101	19.7	3.5	M5x12	A
H.03.03	11	37.6	60	90	73	101	19.7	3.5	M5x12	A
H.04.02	14	37.4	50	95	95	104	25.2	3.5	M6x15	B
H.05.02	14	37.4	60	75	73	104	25.2	3.5	M6x15	B
H.06.02	14	37.4	80	100	95	104	25.2	4	M6x15	B
H.06.05	14	37.4	80	100	88	104	25.2	4	M6x15	B
H.07.01	14	37.4	60	75	73	104	25.2	3.5	M5x12	B
H.32.01	14	37.4	60	82	73	104	25.2	3.5	M5x12	B

27781410/EN – 03/2022

			P7BG31	
Gear ratio			**4**	**5.5**
Short-time duty				
Peak torque	M_{a_pk}	Nm	200	230
Peak motor speed	n_{e_pk}	min^{-1}	4400	5500
Peak radial force	$F_{R_a_pk}$	N	4830	4830
Peak axial force	$F_{A_a_pk}$	N	2790	2790
Peak breakdown torque	$M_{K_a_pk}$	Nm	400	400
Continuous duty				
Nominal torque	M_{a_N}	Nm	140	132
Nominal motor speed	n_{e_N}	min^{-1}	2600	2900
Nominal radial force	$F_{R_a_N}$	N	2620	2790
Nominal axial force	$F_{A_a_N}$	N	2370	2370
Nominal breakdown torque	$M_{K_a_N}$	Nm	215	230
General technical data				
Torsional rigidity	c_{tr}	Nm/ arcmin	46	43
Rotational clearance	φ	arcmin	≤ 2 (R) – 4 (N)	
Pull-out rigidity	c_{pr}	Nm/ arcmin	261	
Service life	L	h	> 20000	
Cyclic duration factor	ED	%	≤ 60	
Gear unit temperature	T_{max}	°C	90	
Ambient temperature	T_{amb}	°C	-15 – +40	
Nominal ambient temperature	T_{amb_N}	°C	20	
Efficiency	η	%	94	94
Sound pressure level	L_P	dB (A)	≤ 56	≤ 56
Degree of protection	–	–	IP65	
No-load speed	M_{e_0}	Nm	0.52	0.52
Emergency stop torque	M_{a_es}	Nm	415	490
Mass moment of inertia incl. adapter				
Coupling Ø 14 mm	J	10^{-4} kgm^2	0.67	0.46
Coupling Ø 19 mm	J	10^{-4} kgm^2	0.90	0.69
Coupling Ø 24 mm	J	10^{-4} kgm^2	2.17	1.96
Mass incl. adapter				
Coupling Ø min – max	m	kg	3.09 – 6.10	

27781410/EN – 03/2022

P7BG31..

57 031 00 19

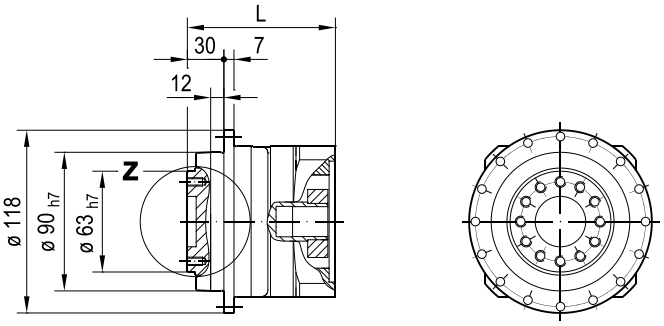

PxBG

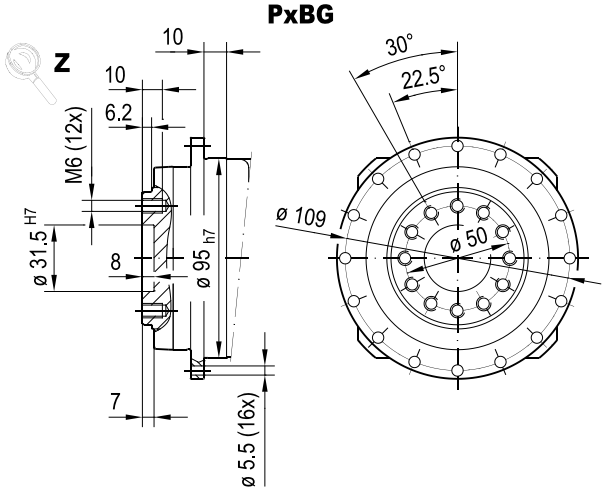

min. □ 95 **Fig. B**

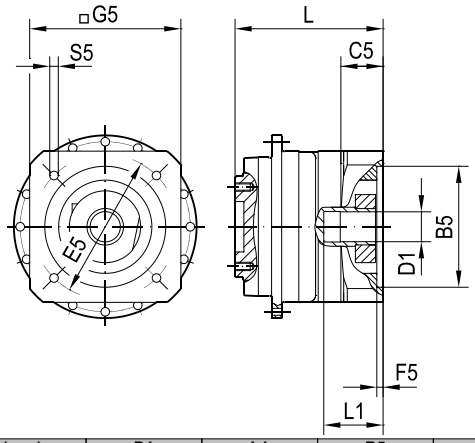

min. □ 120 **Fig. C**

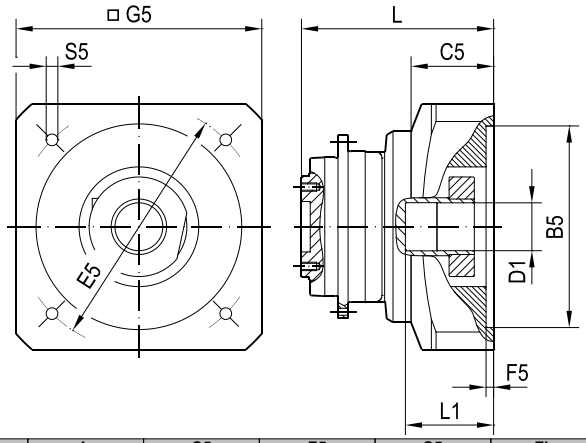

(→ ■ -)	D1	L1	B5	E5	G5	L	C5	F5	S5	Fig.
H.04.03	14	37.4	50	95	95	94	24.2	3.5	M6x15	B
H.05.03	14	37.4	60	75	95	94	24.2	3.5	M6x15	B
H.06.03	14	37.4	80	100	95	94	24.2	4	M6x15	B
H.07.02	14	37.4	60	75	95	94	24.2	3.5	M5x12	B
H.08.01	19	42	80	100	95	101	28	4	M6x15	B
H.09.01	19	42	95	115	105	101	28	4	M8x18	B
H.10.01	19	42	95	130	120	101	28	4	M8x18	B
H.11.01	19	42	110	130	120	101	28	4	M8x18	B
H.12.01	24	50	95	115	120	115	33.5	5	M8x18	C
H.13.01	24	50	95	130	120	115	33.5	5	M8x18	C
H.14.01	24	50	110	130	120	115	33.5	5	M8x18	C
H.15.01	24	51	110	165	143	117	35	5	M10x24	C
H.16.01	24	51	130	165	143	117	35	5	M10x24	C
H.16.03	24	51	130	165	140	117	35	5	M10x24	C
H.17.01	24	52	180	215	192	118	36	5	M10x24	C
H.32.02	14	37.4	60	82	95	94	24.2	3.5	M5x12	B

27781410/EN – 03/2022

			P7BG32							
Gear ratio			**16**	**20**	**22**	**27.5**	**28**	**38.5**	**40**	**55**
Short-time duty										
Peak torque	M_{a_pk}	Nm	200	200	230	230	200	230	169	230
Peak motor speed	n_{e_pk}	min^{-1}	7500	7500	7500	7500	7500	7500	7500	7500
Peak radial force	$F_{R_a_pk}$	N	4830	4830	4830	4830	4830	4830	4830	4830
Peak axial force	$F_{A_a_pk}$	N	2790	2790	2790	2790	2790	2790	2790	2790
Peak breakdown torque	$M_{K_a_pk}$	Nm	400	400	400	400	400	400	400	400
Continuous duty										
Nominal torque	M_{a_N}	Nm	140	138	140	137	137	139	140	147
Nominal motor speed	n_{e_N}	min^{-1}	3500	3500	4000	4000	3500	4000	3500	4000
Nominal radial force	$F_{R_a_N}$	N	3640	3890	3850	4110	4100	4110	4100	4110
Nominal axial force	$F_{A_a_N}$	N	2370	2370	2370	2370	2370	2370	2370	2370
Nominal breakdown torque	$M_{K_a_N}$	Nm	300	320	315	340	340	340	340	340
General technical data										
Torsional rigidity	c_{tr}	Nm/ arcmin	50	47	47	47	45	46	40	43
Rotational clearance	φ	arcmin	≤ 1 (R) – 3 (N)							
Pull-out rigidity	c_{pr}	Nm/ arcmin	261							
Service life	L	h	> 20000							
Cyclic duration factor	ED	%	≤ 60							
Gear unit temperature	T_{max}	°C	90							
Ambient temperature	T_{amb}	°C	-15 – +40							
Nominal ambient temperature	T_{amb_N}	°C	20							
Efficiency	η	%	94	94	94	94	94	94	94	94
Sound pressure level	L_P	dB (A)	≤ 56	≤ 56	≤ 56	≤ 56	≤ 56	≤ 56	≤ 56	≤ 56
Degree of protection	–	–	IP65							
No-load speed	M_{e_0}	Nm	0.52	0.52	0.52	0.47	0.47	0.38	0.38	0.38
Emergency stop torque	M_{a_es}	Nm	415	415	490	490	415	495	355	490
Mass moment of inertia incl. adapter										
Coupling Ø 11 mm	J	10^{-4} kgm^2	0.16	0.12	0.15	0.12	0.09	0.09	0.08	0.07
Coupling Ø 14 mm	J	10^{-4} kgm^2	0.30	0.27	0.29	0.26	0.24	0.23	0.22	0.22
Coupling Ø 19 mm	J	10^{-4} kgm^2	0.53	0.49	0.52	0.49	0.46	0.46	0.45	0.44
Mass incl. adapter										
Coupling Ø min – max	m	kg	3.43 – 4.42							

27781410/EN – 03/2022

P7BG32..

57 032 00 19

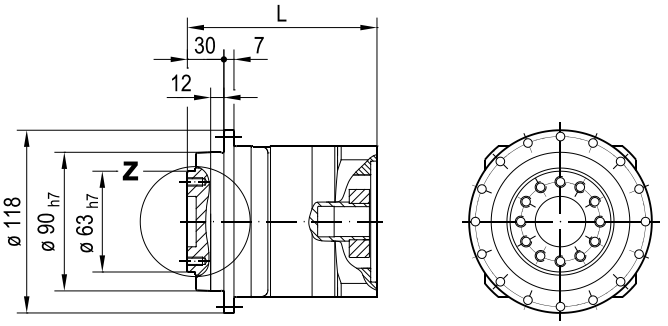

PxBG

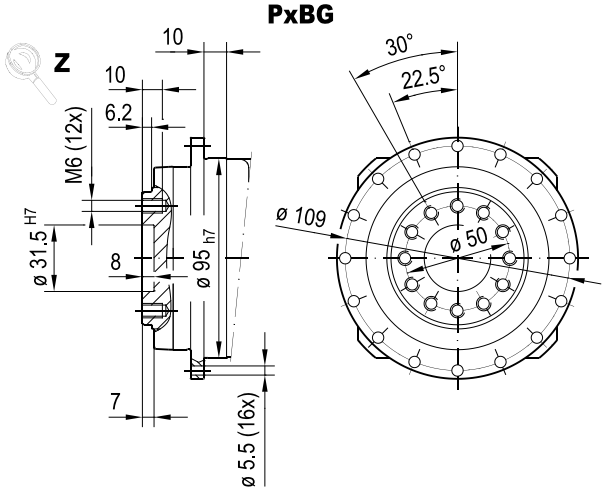

min. □ 73 **Fig. A**

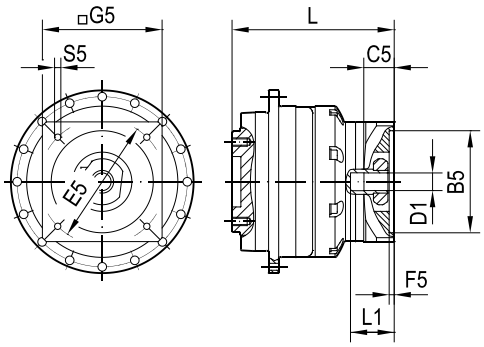

min. □ 95 **Fig. B**

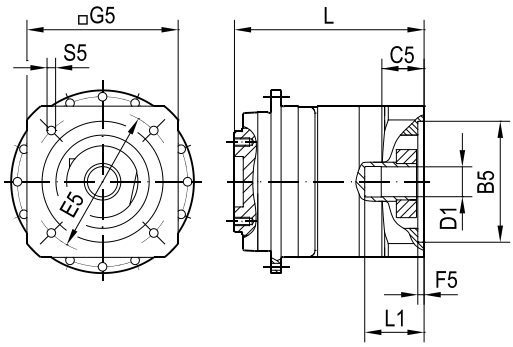

(→)	D1	L1	B5	E5	G5	L	C5	F5	S5	Fig.
H.01.02	11	37.6	40	63	73	119	22.3	0	M4x12	A
H.02.03	11	37.6	60	75	73	119	22.3	3.5	M5x12	A
H.03.02	11	37.6	60	90	73	119	22.3	3.5	M5x12	A
H.04.02	14	37.4	50	95	95	122	25.2	3.5	M6x15	A
H.04.03	14	37.4	50	95	95	122	24.2	3.5	M6x15	B
H.05.02	14	37.4	60	75	73	122	25.2	3.5	M6x15	A
H.05.03	14	37.4	60	75	95	122	24.2	3.5	M6x15	B
H.06.03	14	37.4	80	100	95	122	24.2	4	M6x15	B
H.06.05	14	37.4	80	100	88	122	25.2	4	M6x15	A
H.07.01	14	37.4	60	75	73	122	25.2	3.5	M5x12	A
H.07.02	14	37.4	60	75	95	122	24.2	3.5	M5x12	B
H.08.01	19	42	80	100	95	130	28	4	M6x15	B
H.09.01	19	42	95	115	105	130	28	4	M8x18	B
H.10.01	19	42	95	130	120	130	28	4	M8x18	B
H.11.01	19	42	110	130	120	130	28	4	M8x18	B
H.32.01	14	37.4	60	82	73	122	25.2	3.5	M5x12	A
H.32.02	14	37.4	60	82	95	122	24.2	3.5	M5x12	B

27781410/EN – 03/2022

			P7BG33									
Gear ratio			**64**	**80**	**88**	**110**	**112**	**137.5**	**140**	**154**	**160**	**192.5**
Short-time duty												
Peak torque	M_{a_pk}	Nm	200	200	230	230	200	230	200	230	200	230
Peak motor speed	n_{e_pk}	min^{-1}	7500	7500	7500	7500	7500	7500	7500	7500	7500	7500
Peak radial force	$F_{R_a_pk}$	N	4830	4830	4830	4830	4830	4830	4830	4830	4830	4830
Peak axial force	$F_{A_a_pk}$	N	2790	2790	2790	2790	2790	2790	2790	2790	2790	2790
Peak breakdown torque	$M_{K_a_pk}$	Nm	400	400	400	400	400	400	400	400	400	400
Continuous duty												
Nominal torque	M_{a_N}	Nm	140	140	140	140	140	137	140	140	140	137
Nominal motor speed	n_{e_N}	min^{-1}	3500	3500	3500	3500	3500	3500	3500	3500	3500	3500
Nominal radial force	$F_{R_a_N}$	N	4100	4100	4110	4110	4100	4110	4100	4110	4100	4110
Nominal axial force	$F_{A_a_N}$	N	2370	2370	2370	2370	2370	2370	2370	2370	2370	2370
Nominal breakdown torque	$M_{K_a_N}$	Nm	340	340	340	340	340	340	340	340	340	340
General technical data												
Torsional rigidity	c_{tr}	Nm/ arcmin	50	50	48	48	49	48	48	48	49	48
Rotational clearance	φ	arcmin	≤ 2.5 (R) – 3 (N)									
Pull-out rigidity	c_{pr}	Nm/ arcmin	261									
Service life	L	h	> 20000									
Cyclic duration factor	ED	%	≤ 60									
Gear unit temperature	T_{max}	°C	90									
Ambient temperature	T_{amb}	°C	-15 – +40									
Nominal ambient temperature	T_{amb_N}	°C	20									
Efficiency	η	%	92	92	92	92	92	92	92	92	92	92
Sound pressure level	L_P	dB (A)	≤ 56	≤ 56	≤ 56	≤ 56	≤ 56	≤ 56	≤ 56	≤ 56	≤ 56	≤ 56
Degree of protection	–	–	IP65									
No-load speed	M_{e_0}	Nm	0.34	0.31	0.29	0.26	0.26	0.23	0.23	0.21	0.21	0.19
Emergency stop torque	M_{a_es}	Nm	410	410	495	495	410	495	410	495	410	495
Mass moment of inertia incl. adapter												
Coupling Ø 11 mm	J	10^{-4} kgm^2	0.10	0.09	0.10	0.09	0.07	0.09	0.07	0.07	0.07	0.07
Coupling Ø 14 mm	J	10^{-4} kgm^2	0.25	0.23	0.25	0.23	0.22	0.23	0.22	0.22	0.21	0.22
Mass incl. adapter												
Coupling Ø min – max	m	kg	3.91 – 4.30									

27781410/EN – 03/2022

P7BG33..

57 087 00 19

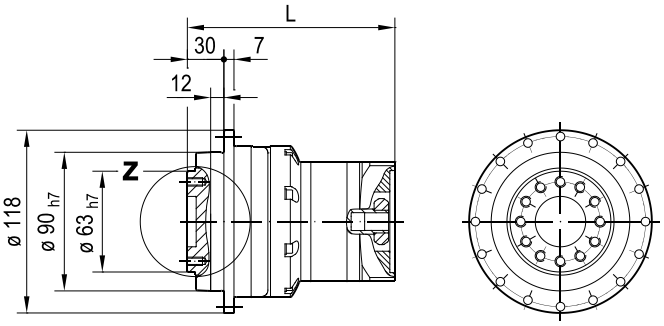

PxBG

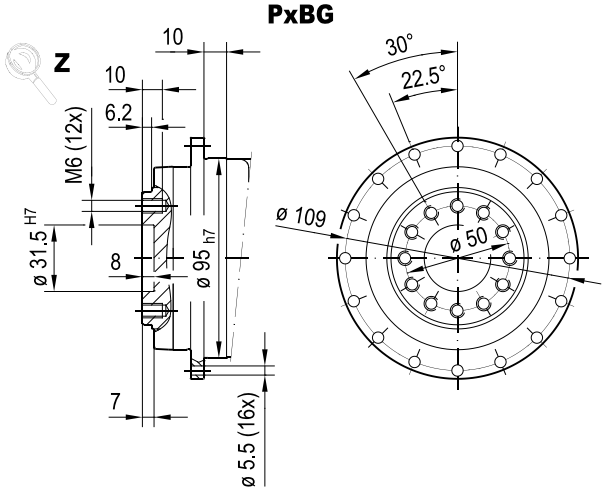

min. □ 55 **Fig. A**

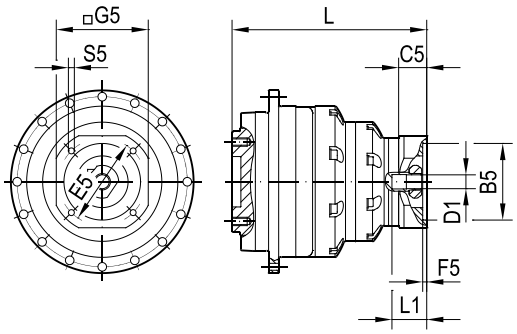

min. □ 73 **Fig. B**

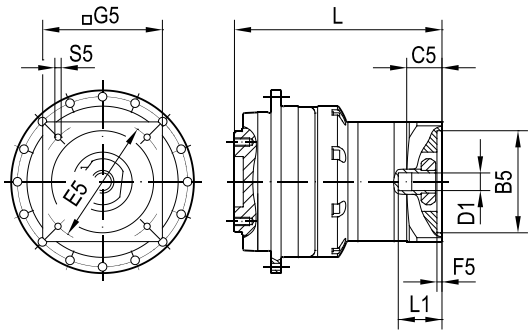

(→)	D1	L1	B5	E5	G5	L	C5	F5	S5	Fig.
H.01.03	11	37.6	40	63	55	142	19.7	3.5	M4x12	A
H.02.04	11	37.6	60	75	62	142	19.7	3.5	M5x12	A
H.02.05	11	37.6	60	75	73	142	19.7	3.5	M5x12	A
H.03.03	11	37.6	60	90	73	142	19.7	3.5	M5x12	A
H.04.02	14	37.4	50	95	95	145	25.2	3.5	M6x15	B
H.05.02	14	37.4	60	75	73	145	25.2	3.5	M6x15	B
H.06.02	14	37.4	80	100	95	145	25.2	4	M6x15	B
H.06.05	14	37.4	80	100	88	145	25.2	4	M6x15	B
H.07.01	14	37.4	60	75	73	145	25.2	3.5	M5x12	B
H.32.01	14	37.4	60	82	73	145	25.2	3.5	M5x12	B

27781410/EN – 03/2022

			P7BG33								
Gear ratio			**196**	**200**	**220**	**269.5**	**275**	**280**	**385**	**400**	**550**
Short-time duty											
Peak torque	M_{a_pk}	Nm	200	200	230	230	230	200	230	169	230
Peak motor speed	n_{e_pk}	min^{-1}	7500	7500	7500	7500	7500	7500	7500	7500	7500
Peak radial force	$F_{R_a_pk}$	N	4830	4830	4830	4830	4830	4830	4830	4830	4830
Peak axial force	$F_{A_a_pk}$	N	2790	2790	2790	2790	2790	2790	2790	2790	2790
Peak breakdown torque	$M_{K_a_pk}$	Nm	400	400	400	400	400	400	400	400	400
Continuous duty											
Nominal torque	M_{a_N}	Nm	140	140	140	139	137	140	139	140	147
Nominal motor speed	n_{e_N}	min^{-1}	3500	3500	3500	3500	3500	3500	3500	3500	3500
Nominal radial force	$F_{R_a_N}$	N	4100	4100	4110	4110	4110	4100	4110	4100	4110
Nominal axial force	$F_{A_a_N}$	N	2370	2370	2370	2370	2370	2370	2370	2370	2370
Nominal breakdown torque	$M_{K_a_N}$	Nm	340	340	340	340	340	340	340	340	340
General technical data											
Torsional rigidity	c_{tr}	Nm/ arcmin	46	47	48	47	47	46	46	41	44
Rotational clearance	φ	arcmin	≤ 2.5 (R) – 3 (N)								
Pull-out rigidity	c_{pr}	Nm/ arcmin	261								
Service life	L	h	> 20000								
Cyclic duration factor	ED	%	≤ 60								
Gear unit temperature	T_{max}	°C	90								
Ambient temperature	T_{amb}	°C	-15 – +40								
Nominal ambient temperature	T_{amb_N}	°C	20								
Efficiency	η	%	92	92	92	92	92	92	92	92	92
Sound pressure level	L_P	dB (A)	≤ 56	≤ 56	≤ 56	≤ 56	≤ 56	≤ 56	≤ 56	≤ 56	≤ 56
Degree of protection	–	–	IP65								
No-load speed	M_{e_0}	Nm	0.19	0.19	0.18	0.16	0.16	0.16	0.13	0.13	0.11
Emergency stop torque	M_{a_es}	Nm	410	410	495	495	495	410	495	355	490
Mass moment of inertia incl. adapter											
Coupling Ø 11 mm	J	10^{-4} kgm^2	0.07	0.07	0.07	0.07	0.07	0.07	0.07	0.07	0.07
Coupling Ø 14 mm	J	10^{-4} kgm^2	0.22	0.21	0.21	0.22	0.21	0.21	0.21	0.21	0.21
Mass incl. adapter											
Coupling Ø min – max	m	kg	3.91 – 4.30								

27781410/EN – 03/2022

P7BG33..

57 087 00 19

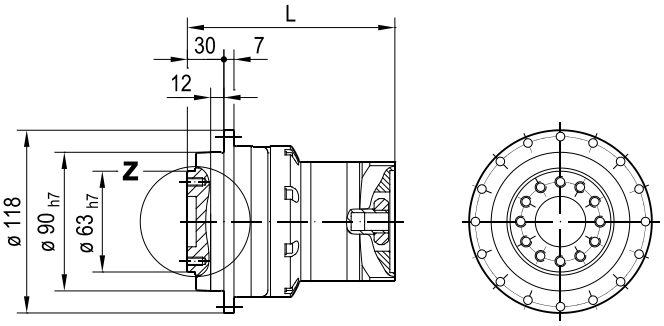

PxBG

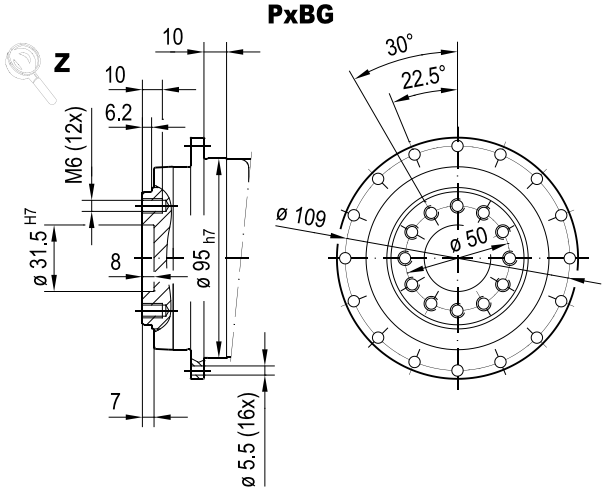

min. □ 55 **Fig. A**

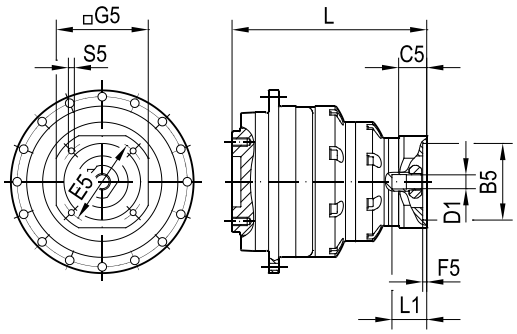

min. □ 73 **Fig. B**

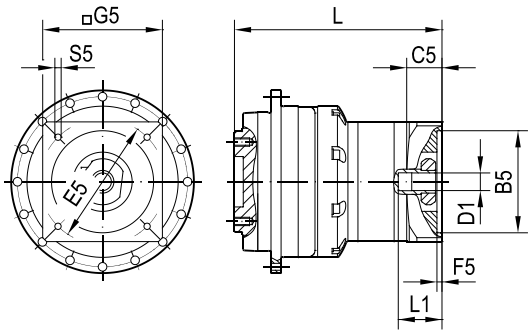

(→)	D1	L1	B5	E5	G5	L	C5	F5	S5	Fig.
H.01.03	11	37.6	40	63	55	142	19.7	3.5	M4x12	A
H.02.04	11	37.6	60	75	62	142	19.7	3.5	M5x12	A
H.02.05	11	37.6	60	75	73	142	19.7	3.5	M5x12	A
H.03.03	11	37.6	60	90	73	142	19.7	3.5	M5x12	A
H.04.02	14	37.4	50	95	95	145	25.2	3.5	M6x15	B
H.05.02	14	37.4	60	75	73	145	25.2	3.5	M6x15	B
H.06.02	14	37.4	80	100	95	145	25.2	4	M6x15	B
H.06.05	14	37.4	80	100	88	145	25.2	4	M6x15	B
H.07.01	14	37.4	60	75	73	145	25.2	3.5	M5x12	B
H.32.01	14	37.4	60	82	73	145	25.2	3.5	M5x12	B

27781410/EN – 03/2022

			P7BG41	
Gear ratio			**4**	**5.5**
Short-time duty				
Peak torque	M_{a_pk}	Nm	500	530
Peak motor speed	n_{e_pk}	min^{-1}	3400	4250
Peak radial force	$F_{R_a_pk}$	N	5820	5820
Peak axial force	$F_{A_a_pk}$	N	4800	4800
Peak breakdown torque	$M_{K_a_pk}$	Nm	550	550
Continuous duty				
Nominal torque	M_{a_N}	Nm	300	275
Nominal motor speed	n_{e_N}	min^{-1}	2300	2500
Nominal radial force	$F_{R_a_N}$	N	3440	3690
Nominal axial force	$F_{A_a_N}$	N	4080	4080
Nominal breakdown torque	$M_{K_a_N}$	Nm	325	345
General technical data				
Torsional rigidity	c_{tr}	Nm/ arcmin	114	91
Rotational clearance	φ	arcmin	≤ 1 (R) – 3 (N)	
Pull-out rigidity	c_{pr}	Nm/ arcmin	582	
Service life	L	h	> 20000	
Cyclic duration factor	ED	%	≤ 60	
Gear unit temperature	T_{max}	°C	90	
Ambient temperature	T_{amb}	°C	-15 – +40	
Nominal ambient temperature	T_{amb_N}	°C	20	
Efficiency	η	%	94	94
Sound pressure level	L_P	dB (A)	≤ 58	≤ 58
Degree of protection	–	–	IP65	
No-load speed	M_{e_0}	Nm	1.00	1.00
Emergency stop torque	M_{a_es}	Nm	900	1000
Mass moment of inertia incl. adapter				
Coupling Ø 19 mm	J	10^{-4} kgm^2	1.87	1.23
Coupling Ø 24 mm	J	10^{-4} kgm^2	3.14	2.50
Coupling Ø 28 mm	J	10^{-4} kgm^2	3.69	3.05
Coupling Ø 32 mm	J	10^{-4} kgm^2	5.96	5.33
Coupling Ø 38 mm	J	10^{-4} kgm^2	8.89	8.25
Mass incl. adapter				
Coupling Ø min – max	m	kg	5.44 – 12.76	

27781410/EN – 03/2022

P7BG41..

57 033 00 19

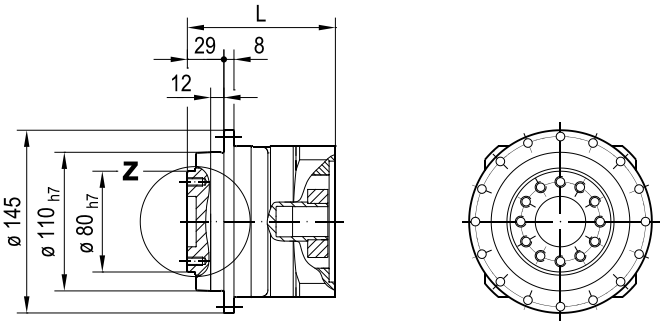

PxBG

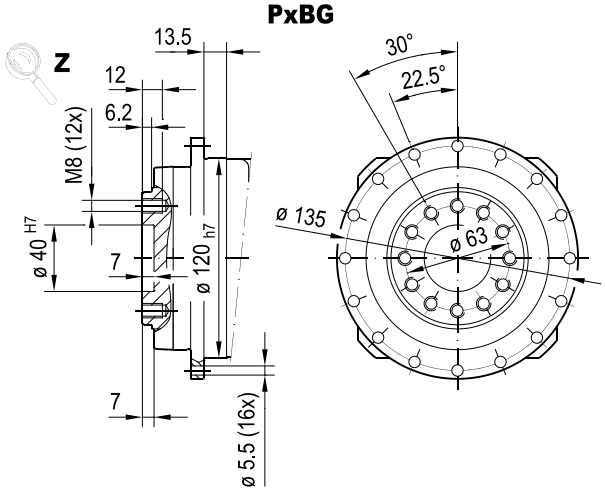

min. □ 120 Fig. B

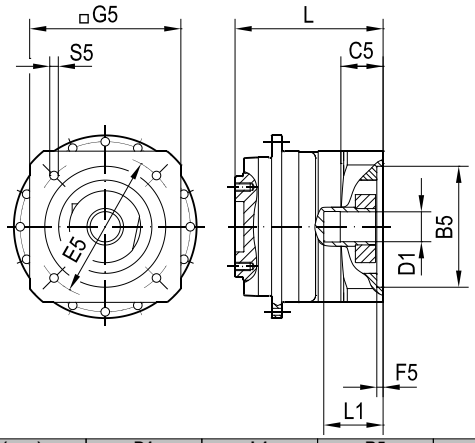

min. □ 152 Fig. C

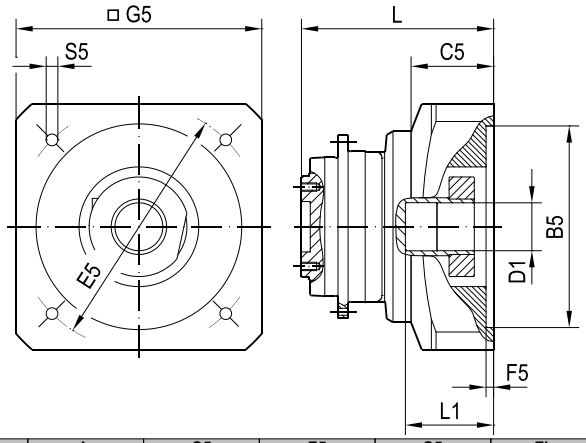

(→ ■ -)	D1	L1	B5	E5	G5	L	C5	F5	S5	Fig.
H.08.02	19	41	80	100	120	102	27	4	M6x15	B
H.09.02	19	42	95	115	120	103	28	4	M8x18	B
H.10.02	19	42	95	130	120	103	28	4	M8x18	B
H.11.02	19	42	110	130	120	103	28	4	M8x18	B
H.12.01	24	50	95	115	120	118	33.5	5	M8x18	B
H.13.01	24	50	95	130	120	118	33.5	5	M8x18	B
H.14.01	24	50	110	130	120	118	33.5	5	M8x18	B
H.15.01	24	51	110	165	143	119	35	5	M10x24	B
H.16.01	24	51	130	165	143	119	35	5	M10x24	B
H.16.03	24	51	130	165	140	119	35	5	M10x24	B
H.17.01	24	52	180	215	192	120	36	5	M10x24	B
H.18.01	28	60	130	165	143	126	45.5	5	M10x24	B
H.18.02	28	60	130	165	138	126	45.5	5	M10x24	B
H.19.01	28	60	180	215	192	126	45.5	5	M12x28	B
H.19.02	28	60	180	215	215	126	45.5	5	M12x28	B
H.20.01	32	65	130	165	152	130	43	5	M10x24	C
H.21.01	32	65	130	215	192	130	43	5	M12x28	C
H.22.01	32	62	155	190	163	127	40	5	M10x24	C
H.23.01	32	65	180	215	190	130	43	5	M12x28	C
H.23.02	32	65	180	215	215	130	43	5	M12x28	C
H.24.01	38	80	114.3	200	180	146	58.5	5	M12x28	C
H.25.01	38	80	180	215	192	146	58.5	5	M12x28	C
H.25.02	38	80	180	215	215	146	58.5	5	M12x28	C
H.25.04	38	80	180	215	190	146	58.5	5	M12x28	C
H.26.01	38	80	230	265	240	146	58.5	5	M12x28	C

27781410/EN – 03/2022

			P7BG42							
Gear ratio			**16**	**20**	**22**	**27.5**	**28**	**38.5**	**40**	**55**
Short-time duty										
Peak torque	M_{a_pk}	Nm	500	500	530	530	500	530	500	530
Peak motor speed	n_{e_pk}	min^{-1}	7500	7500	7500	7500	7500	7500	7500	7500
Peak radial force	$F_{R_a_pk}$	N	5820	5820	5820	5820	5820	5820	5820	5820
Peak axial force	$F_{A_a_pk}$	N	4800	4800	4800	4800	4800	4800	4800	4800
Peak breakdown torque	$M_{K_a_pk}$	Nm	550	550	550	550	550	550	550	550
Continuous duty										
Nominal torque	M_{a_N}	Nm	325	325	310	310	325	370	325	410
Nominal motor speed	n_{e_N}	min^{-1}	2800	2800	3500	3500	2800	3500	2800	3500
Nominal radial force	$F_{R_a_N}$	N	4910	4940	4940	4940	4940	4940	4940	4940
Nominal axial force	$F_{A_a_N}$	N	4080	4080	4080	4080	4080	4080	4080	4080
Nominal breakdown torque	$M_{K_a_N}$	Nm	465	465	465	465	465	465	465	465
General technical data										
Torsional rigidity	c_{tr}	Nm/ arcmin	113	111	99	98	107	95	98	92
Rotational clearance	φ	arcmin	≤ 1 (R) – 3 (N)							
Pull-out rigidity	c_{pr}	Nm/ arcmin	582							
Service life	L	h	> 20000							
Cyclic duration factor	ED	%	≤ 60							
Gear unit temperature	T_{max}	°C	90							
Ambient temperature	T_{amb}	°C	-15 – +40							
Nominal ambient temperature	T_{amb_N}	°C	20							
Efficiency	η	%	94	94	94	94	94	94	94	94
Sound pressure level	L_P	dB (A)	≤ 58	≤ 58	≤ 58	≤ 58	≤ 58	≤ 58	≤ 58	≤ 58
Degree of protection	–	–	IP65							
No-load speed	M_{e_0}	Nm	1.00	1.00	1.00	0.87	0.87	0.78	0.78	0.70
Emergency stop torque	M_{a_es}	Nm	900	900	1010	1010	900	1010	900	1010
Mass moment of inertia incl. adapter										
Coupling Ø 14 mm	J	10^{-4} kgm^2	0.57	0.44	0.53	0.42	0.33	0.31	0.26	0.26
Coupling Ø 19 mm	J	10^{-4} kgm^2	0.80	0.67	0.76	0.65	0.55	0.54	0.49	0.48
Coupling Ø 24 mm	J	10^{-4} kgm^2	2.07	1.94	2.03	1.91	1.82	1.81	1.76	1.75
Coupling Ø 28 mm	J	10^{-4} kgm^2	2.62	2.49	2.58	2.47	2.38	2.37	2.32	2.31
Mass incl. adapter										
Coupling Ø min – max	m	kg	6.10 – 10.92							

27781410/EN – 03/2022

P7BG42..

57 034 00 19

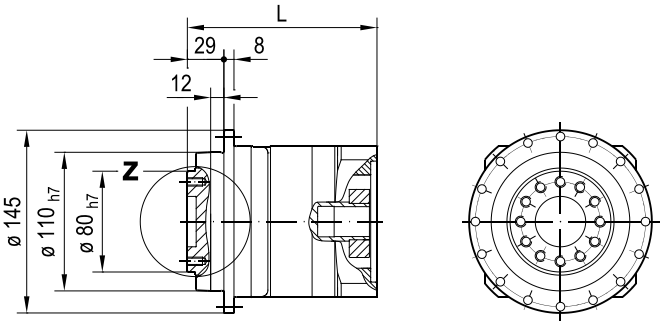

PxBG

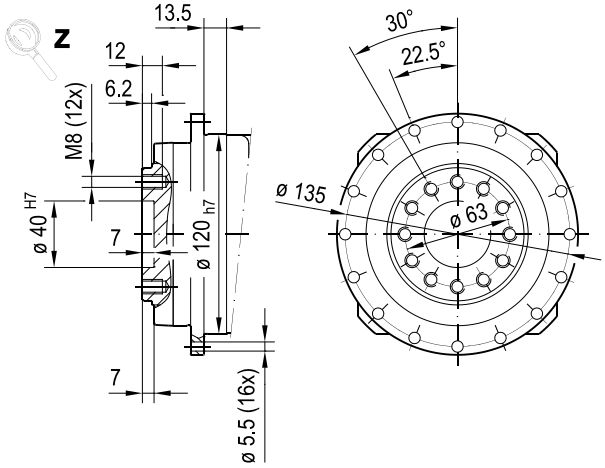

min. □ 95 Fig. A

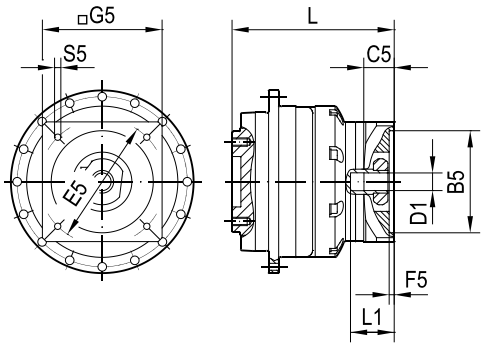

min. □ 120 Fig. B

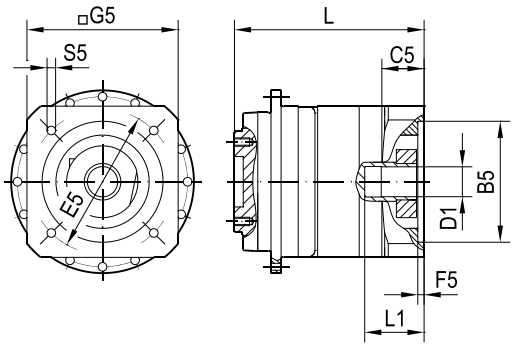

(→ 🕮 -)	D1	L1	B5	E5	G5	L	C5	F5	S5	Fig.
H.04.03	14	37.4	50	95	95	129	24.2	3.5	M6x15	A
H.05.03	14	37.4	60	75	95	129	24.2	3.5	M6x15	A
H.06.03	14	37.4	80	100	95	129	24.2	4	M6x15	A
H.07.02	14	37.4	60	75	95	129	24.2	3.5	M5x12	A
H.08.01	19	42	80	100	95	136	28	4	M6x15	A
H.08.02	19	41	80	100	120	135	27	4	M6x15	B
H.09.01	19	42	95	115	105	136	28	4	M8x18	A
H.09.02	19	42	95	115	120	136	28	4	M8x18	B
H.10.02	19	42	95	130	120	136	28	4	M8x18	B
H.11.02	19	42	110	130	120	136	28	4	M8x18	B
H.12.01	24	50	95	115	120	151	33.5	5	M8x18	B
H.13.01	24	50	95	130	120	151	33.5	5	M8x18	B
H.14.01	24	50	110	130	120	151	33.5	5	M8x18	B
H.15.01	24	51	110	165	143	152	35	5	M10x24	B
H.16.01	24	51	130	165	143	152	35	5	M10x24	B
H.16.03	24	51	130	165	140	152	35	5	M10x24	B
H.17.01	24	52	180	215	192	153	36	5	M10x24	B
H.18.01	28	60	130	165	143	159	45.5	5	M10x24	B
H.18.02	28	60	130	165	138	159	45.5	5	M10x24	B
H.19.01	28	60	180	215	192	159	45.5	5	M12x28	B
H.19.02	28	60	180	215	215	159	45.5	5	M12x28	B
H.32.02	14	37.4	60	82	95	129	24.2	3.5	M5x12	A

27781410/EN – 03/2022

			P7BG43								
Gear ratio			**64**	**80**	**88**	**112**	**110**	**137.5**	**140**	**154**	**160**
Short-time duty											
Peak torque	M_{a_pk}	Nm	480	480	480	480	480	480	480	480	480
Peak motor speed	n_{e_pk}	min^{-1}	7500	7500	7500	7500	7500	7500	7500	7500	7500
Peak radial force	$F_{R_a_pk}$	N	5820	5820	5820	5820	5820	5820	5820	5820	5820
Peak axial force	$F_{A_a_pk}$	N	4800	4800	4800	4800	4800	4800	4800	4800	4800
Peak breakdown torque	$M_{K_a_pk}$	Nm	550	550	550	550	550	550	550	550	550
Continuous duty											
Nominal torque	M_{a_N}	Nm	255	270	275	300	295	315	315	330	330
Nominal motor speed	n_{e_N}	min^{-1}	4000	4000	4000	4000	4000	4000	4000	4000	4000
Nominal radial force	$F_{R_a_N}$	N	4940	4940	4940	4940	4940	4940	4940	4940	4940
Nominal axial force	$F_{A_a_N}$	N	4080	4080	4080	4080	4080	4080	4080	4080	4080
Nominal breakdown torque	$M_{K_a_N}$	Nm	465	465	465	465	465	465	465	465	465
General technical data											
Torsional rigidity	c_{tr}	Nm/ arcmin	112	112	97	111	97	96	110	96	109
Rotational clearance	φ	arcmin	≤ 2 (R) – 3 (N)								
Pull-out rigidity	c_{pr}	Nm/ arcmin	582								
Service life	L	h	> 20000								
Cyclic duration factor	ED	%	≤ 60								
Gear unit temperature	T_{max}	°C	90								
Ambient temperature	T_{amb}	°C	-15 – +40								
Nominal ambient temperature	T_{amb_N}	°C	20								
Efficiency	η	%	94	94	94	94	94	94	94	94	94
Sound pressure level	L_P	dB (A)	≤ 56	≤ 56	≤ 56	≤ 56	≤ 56	≤ 56	≤ 56	≤ 56	≤ 56
Degree of protection	–	–	IP65								
No-load speed	M_{e_0}	Nm	0.63	0.55	0.52	0.44	0.44	0.38	0.37	0.35	0.34
Emergency stop torque	M_{a_es}	Nm	1060	1060	1010	1060	1010	1010	1060	1010	1060
Mass moment of inertia incl. adapter											
Coupling Ø 11 mm	J	10^{-4} kgm^2	0.15	0.12	0.15	0.09	0.12	0.11	0.09	0.09	0.08
Coupling Ø 14 mm	J	10^{-4} kgm^2	0.30	0.26	0.29	0.23	0.26	0.26	0.23	0.23	0.22
Coupling Ø 19 mm	J	10^{-4} kgm^2	0.52	0.49	0.52	0.46	0.49	0.48	0.46	0.46	0.45
Mass incl. adapter											
Coupling Ø min – max	m	kg	6.44 – 7.49								

27781410/EN – 03/2022

P7BG43..

57 088 00 19

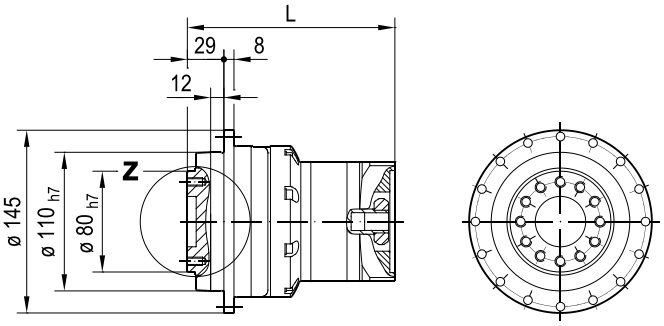

PxBG

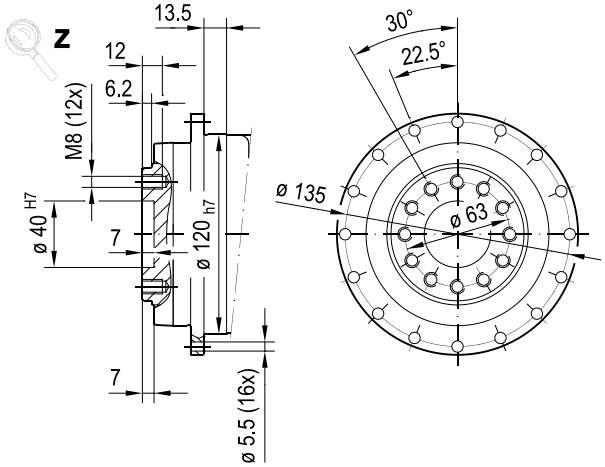

min. □ 73 **Fig. A**

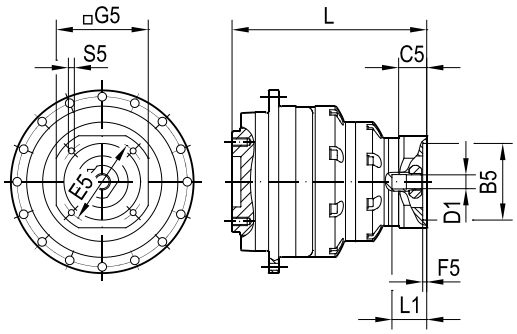

min. □ 95 **Fig. B**

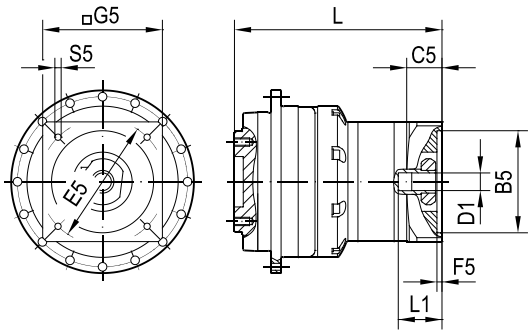

(→ ■ -)	D1	L1	B5	E5	G5	L	C5	F5	S5	Fig.
H.01.02	11	37.6	40	63	73	155	22.3	0	M4x12	A
H.02.03	11	37.6	60	75	73	155	22.3	3.5	M5x12	A
H.03.02	11	37.6	60	90	73	155	22.3	3.5	M5x12	A
H.04.02	14	37.4	50	95	95	158	25.2	3.5	M6x15	A
H.04.03	14	37.4	50	95	95	158	24.2	3.5	M6x15	B
H.05.02	14	37.4	60	75	73	158	25.2	3.5	M6x15	A
H.05.03	14	37.4	60	75	95	158	24.2	3.5	M6x15	B
H.06.03	14	37.4	80	100	95	158	24.2	4	M6x15	B
H.06.05	14	37.4	80	100	88	158	25.2	4	M6x15	A
H.07.01	14	37.4	60	75	73	158	25.2	3.5	M5x12	A
H.07.02	14	37.4	60	75	95	158	24.2	3.5	M5x12	B
H.08.01	19	42	80	100	95	165	28	4	M6x15	B
H.09.01	19	42	95	115	105	165	28	4	M8x18	B
H.10.01	19	42	95	130	120	165	28	4	M8x18	B
H.11.01	19	42	110	130	120	165	28	4	M8x18	B
H.32.01	14	37.4	60	82	73	158	25.2	3.5	M5x12	A
H.32.02	14	37.4	60	82	95	158	24.2	3.5	M5x12	B

27781410/EN – 03/2022

			P7BG43									
Gear ratio			**192.5**	**196**	**200**	**220**	**269.5**	**275**	**280**	**385**	**400**	**550**
Short-time duty												
Peak torque	M_{a_pk}	Nm	480	480	480	480	480	480	480	480	480	480
Peak motor speed	n_{e_pk}	min^{-1}	7500	7500	7500	7500	7500	7500	7500	7500	7500	7500
Peak radial force	$F_{R_a_pk}$	N	5820	5820	5820	5820	5820	5820	5820	5820	5820	5820
Peak axial force	$F_{A_a_pk}$	N	4800	4800	4800	4800	4800	4800	4800	4800	4800	4800
Peak breakdown torque	$M_{K_a_pk}$	Nm	550	550	550	550	550	550	550	550	550	550
Continuous duty												
Nominal torque	M_{a_N}	Nm	350	350	350	360	385	385	385	400	400	400
Nominal motor speed	n_{e_N}	min^{-1}	4000	4000	4000	4000	4000	4000	4000	4000	4000	4000
Nominal radial force	$F_{R_a_N}$	N	4940	4940	4940	4940	4940	4940	4940	4940	4940	4940
Nominal axial force	$F_{A_a_N}$	N	4080	4080	4080	4080	4080	4080	4080	4080	4080	4080
Nominal breakdown torque	$M_{K_a_N}$	Nm	465	465	465	465	465	465	465	465	465	465
General technical data												
Torsional rigidity	c_{tr}	Nm/ arcmin	96	106	108	96	95	96	105	95	98	91
Rotational clearance	φ	arcmin	≤ 2 (R) – 3 (N)									
Pull-out rigidity	c_{pr}	Nm/ arcmin	582									
Service life	L	h	> 20000									
Cyclic duration factor	ED	%	≤ 60									
Gear unit temperature	T_{max}	°C	90									
Ambient temperature	T_{amb}	°C	-15 – +40									
Nominal ambient temperature	T_{amb_N}	°C	20									
Efficiency	η	%	94	94	94	94	94	94	94	94	94	94
Sound pressure level	L_P	dB (A)	≤ 56	≤ 56	≤ 56	≤ 56	≤ 56	≤ 56	≤ 56	≤ 56	≤ 56	≤ 56
Degree of protection	–	–	IP65									
No-load speed	M_{e_0}	Nm	0.30	0.30	0.29	0.27	0.17	0.16	0.14	0.13	0.12	0.11
Emergency stop torque	M_{a_es}	Nm	1010	1060	1060	1010	1010	1010	1060	1010	1060	1010
Mass moment of inertia incl. adapter												
Coupling Ø 11 mm	J	10^{-4} kgm^2	0.09	0.09	0.07	0.08	0.09	0.07	0.07	0.07	0.07	0.07
Coupling Ø 14 mm	J	10^{-4} kgm^2	0.23	0.23	0.22	0.22	0.23	0.22	0.22	0.22	0.21	0.21
Coupling Ø 19 mm	J	10^{-4} kgm^2	0.46	0.46	0.44	0.44	0.46	0.44	0.44	0.44	0.44	0.44
Mass incl. adapter												
Coupling Ø min – max	m	kg	6.44 – 7.49									

27781410/EN – 03/2022

P7BG43..

57 088 00 19

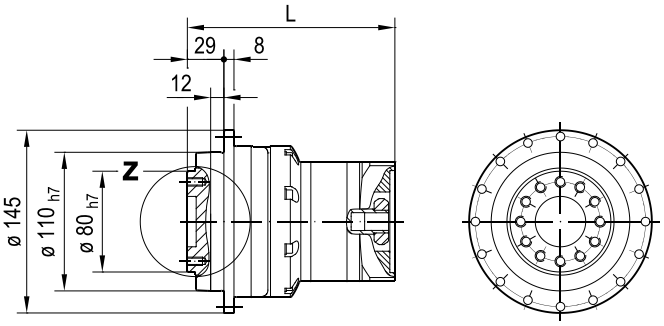

PxBG

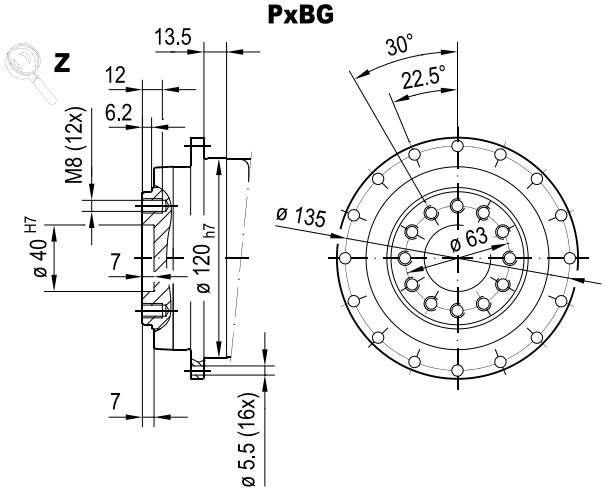

min. □ 73 **Fig. A**

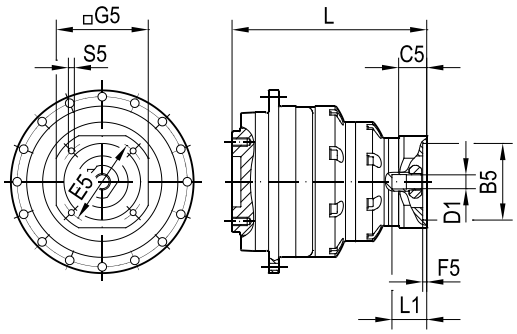

min. □ 95 **Fig. B**

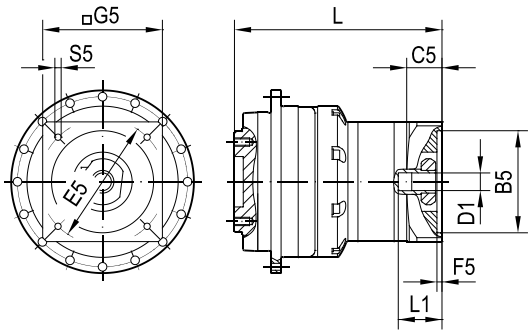

(→ ■ -)	D1	L1	B5	E5	G5	L	C5	F5	S5	Fig.
H.01.02	11	37.6	40	63	73	155	22.3	0	M4x12	A
H.02.03	11	37.6	60	75	73	155	22.3	3.5	M5x12	A
H.03.02	11	37.6	60	90	73	155	22.3	3.5	M5x12	A
H.04.02	14	37.4	50	95	95	158	25.2	3.5	M6x15	A
H.04.03	14	37.4	50	95	95	158	24.2	3.5	M6x15	B
H.05.02	14	37.4	60	75	73	158	25.2	3.5	M6x15	A
H.05.03	14	37.4	60	75	95	158	24.2	3.5	M6x15	B
H.06.03	14	37.4	80	100	95	158	24.2	4	M6x15	B
H.06.05	14	37.4	80	100	88	158	25.2	4	M6x15	A
H.07.01	14	37.4	60	75	73	158	25.2	3.5	M5x12	A
H.07.02	14	37.4	60	75	95	158	24.2	3.5	M5x12	B
H.08.01	19	42	80	100	95	165	28	4	M6x15	B
H.09.01	19	42	95	115	105	165	28	4	M8x18	B
H.10.01	19	42	95	130	120	165	28	4	M8x18	B
H.11.01	19	42	110	130	120	165	28	4	M8x18	B
H.32.01	14	37.4	60	82	73	158	25.2	3.5	M5x12	A
H.32.02	14	37.4	60	82	95	158	24.2	3.5	M5x12	B

27781410/EN – 03/2022

			P7BG51	
Gear ratio			**4**	**5.5**
Short-time duty				
Peak torque	M_{a_pk}	Nm	910	990
Peak motor speed	n_{e_pk}	min^{-1}	2600	3250
Peak radial force	$F_{R_a_pk}$	N	16400	16400
Peak axial force	$F_{A_a_pk}$	N	6130	6130
Peak breakdown torque	$M_{K_a_pk}$	Nm	1330	1330
Continuous duty				
Nominal torque	M_{a_N}	Nm	540	505
Nominal motor speed	n_{e_N}	min^{-1}	1900	2000
Nominal radial force	$F_{R_a_N}$	N	6090	6600
Nominal axial force	$F_{A_a_N}$	N	5210	5210
Nominal breakdown torque	$M_{K_a_N}$	Nm	755	810
General technical data				
Torsional rigidity	c_{tr}	Nm/ arcmin	268	216
Rotational clearance	φ	arcmin	≤ 1 (R) – 3 (N)	
Pull-out rigidity	c_{pr}	Nm/ arcmin	1200	
Service life	L	h	> 20000	
Cyclic duration factor	ED	%	≤ 60	
Gear unit temperature	T_{max}	°C	90	
Ambient temperature	T_{amb}	°C	-15 – +40	
Nominal ambient temperature	T_{amb_N}	°C	20	
Efficiency	η	%	94	94
Sound pressure level	L_P	dB (A)	≤ 60	≤ 60
Degree of protection	–	–	IP65	
No-load speed	M_{e_0}	Nm	2.70	2.70
Emergency stop torque	M_{a_es}	Nm	2010	2010
Mass moment of inertia incl. adapter				
Coupling Ø 24 mm	J	10^{-4} kgm^2	7.02	4.62
Coupling Ø 32 mm	J	10^{-4} kgm^2	9.90	7.49
Coupling Ø 38 mm	J	10^{-4} kgm^2	12.82	10.42
Coupling Ø 48 mm	J	10^{-4} kgm^2	26.75	24.35
Mass incl. adapter				
Coupling Ø min – max	m	kg	11.59 – 23.02	

27781410/EN – 03/2022

P7BG51..

57 035 00 19

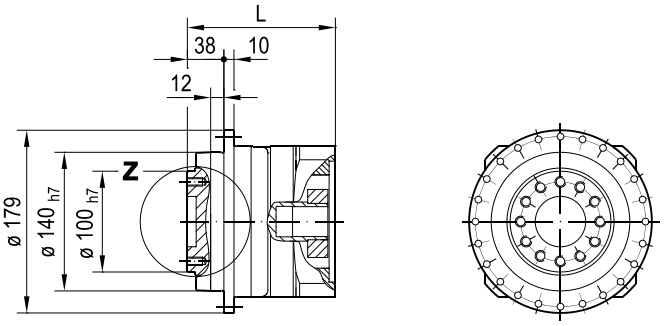

PxBG

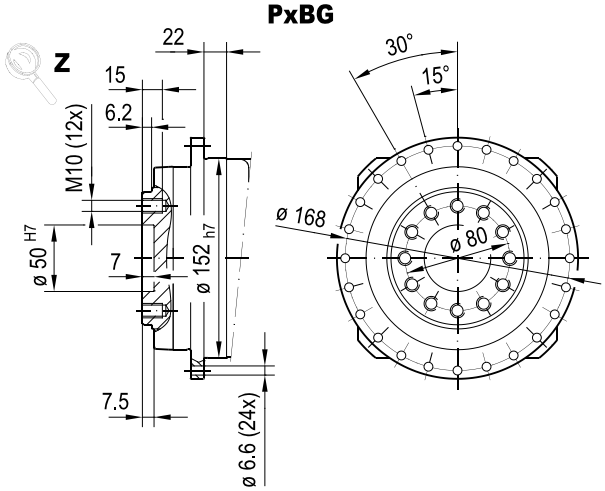

min. □ 152 Fig. B

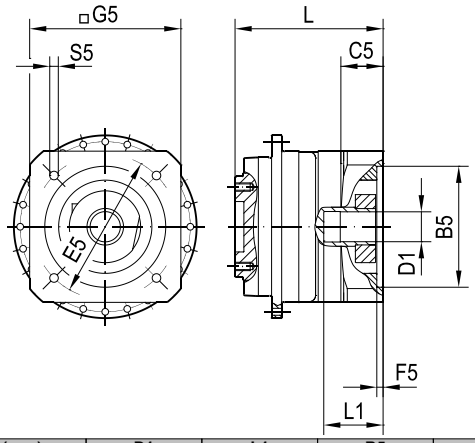

min. □ 215 Fig. C

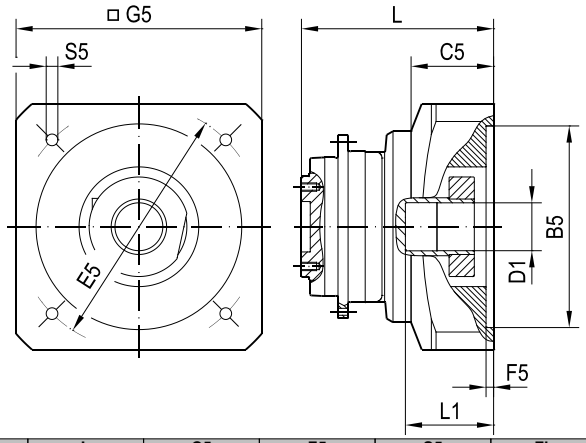

(→ ■ -)	D1	L1	B5	E5	G5	L	C5	F5	S5	Fig.
H.12.02	24	50	95	115	152	132	34.5	5	M8x18	B
H.13.02	24	50	95	130	152	132	34.5	5	M8x18	B
H.14.02	24	50	110	130	152	132	34.5	5	M8x18	B
H.15.02	24	50	110	165	152	133	35	5	M10x24	B
H.16.02	24	50	130	165	152	133	35	5	M10x24	B
H.17.02	24	50	180	215	192	133	35	5	M10x24	B
H.20.01	32	65	130	165	152	145	43	5	M10x24	B
H.21.01	32	65	130	215	192	145	43	5	M12x28	B
H.22.01	32	62	155	190	163	142	40	5	M10x24	B
H.23.01	32	65	180	215	190	145	43	5	M12x28	B
H.23.02	32	65	180	215	215	145	43	5	M12x28	B
H.24.01	38	80	114.3	200	180	160	58.5	5	M12x28	B
H.25.01	38	80	180	215	192	160	58.5	5	M12x28	B
H.25.02	38	80	180	215	215	160	58.5	5	M12x28	B
H.25.04	38	80	180	215	190	160	58.5	5	M12x28	B
H.26.01	38	80	230	265	240	160	58.5	5	M12x28	B
H.27.01	48	85	180	215	215	172	54.5	7	M12x28	C
H.28.01	48	110	230	265	240	197	79.5	7	M12x28	C
H.30.01	48	82	250	300	262	169	51.5	7	M16x36	C

27781410/EN – 03/2022

			P7BG52							
Gear ratio			**16**	**20**	**22**	**27.5**	**28**	**38.5**	**40**	**55**
Short-time duty										
Peak torque	M_{a_pk}	Nm	910	910	990	990	910	990	910	990
Peak motor speed	n_{e_pk}	min^{-1}	6250	6250	6250	6250	6250	6250	6250	6250
Peak radial force	$F_{R_a_pk}$	N	16400	16400	16400	16400	16400	16400	16400	16400
Peak axial force	$F_{A_a_pk}$	N	6130	6130	6130	6130	6130	6130	6130	6130
Peak breakdown torque	$M_{K_a_pk}$	Nm	1330	1330	1330	1330	1330	1330	1330	1330
Continuous duty										
Nominal torque	M_{a_N}	Nm	545	545	520	565	545	635	545	715
Nominal motor speed	n_{e_N}	min^{-1}	2900	2800	3000	3000	2900	3000	2900	3000
Nominal radial force	$F_{R_a_N}$	N	8140	8790	8860	9480	9630	10400	10700	11600
Nominal axial force	$F_{A_a_N}$	N	5210	5210	5210	5210	5210	5210	5210	5210
Nominal breakdown torque	$M_{K_a_N}$	Nm	1000	1090	1090	1130	1130	1130	1130	1130
General technical data										
Torsional rigidity	c_{tr}	Nm/ arcmin	261	253	234	229	242	228	227	220
Rotational clearance	φ	arcmin	≤ 1 (R) – 3 (N)							
Pull-out rigidity	c_{pr}	Nm/ arcmin	1200							
Service life	L	h	> 20000							
Cyclic duration factor	ED	%	≤ 60							
Gear unit temperature	T_{max}	°C	90							
Ambient temperature	T_{amb}	°C	-15 – +40							
Nominal ambient temperature	T_{amb_N}	°C	20							
Efficiency	η	%	94	94	94	94	94	94	94	94
Sound pressure level	L_P	dB (A)	≤ 60	≤ 60	≤ 60	≤ 60	≤ 60	≤ 60	≤ 60	≤ 60
Degree of protection	–	–	IP65							
No-load speed	M_{e_0}	Nm	2.70	2.70	2.70	2.40	2.40	2.10	2.10	1.70
Emergency stop torque	M_{a_es}	Nm	2010	2010	2030	2030	2010	2030	2010	2040
Mass moment of inertia incl. adapter										
Coupling Ø 19 mm	J	10^{-4} kgm^2	1.84	1.36	1.69	1.26	0.90	0.85	0.66	0.64
Coupling Ø 24 mm	J	10^{-4} kgm^2	3.11	2.63	2.96	2.53	2.17	2.12	1.93	1.91
Coupling Ø 28 mm	J	10^{-4} kgm^2	3.66	3.18	3.51	3.08	2.72	2.67	2.49	2.46
Coupling Ø 32 mm	J	10^{-4} kgm^2	5.93	5.45	5.78	5.36	5.01	4.96	4.77	4.75
Coupling Ø 38 mm	J	10^{-4} kgm^2	8.86	8.38	8.71	8.28	7.93	7.89	7.70	7.67
Mass incl. adapter										
Coupling Ø min – max	m	kg	12.06 – 19.76							

27781410/EN – 03/2022

P7BG52..

57 036 00 19

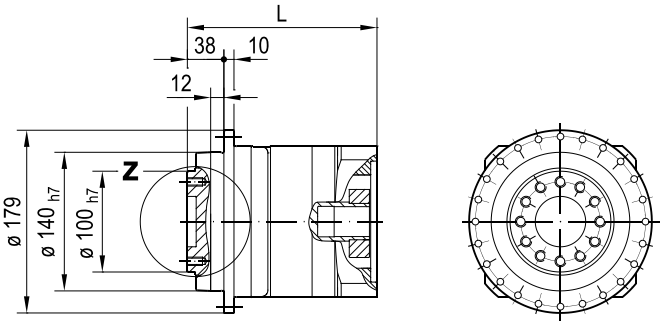

PxBG

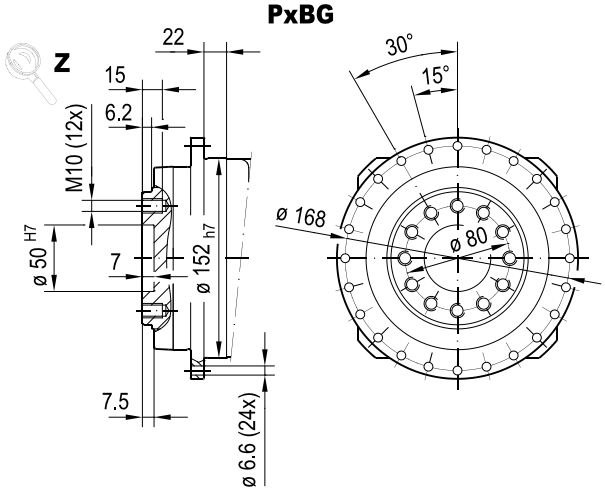

min. □ 120 Fig. A

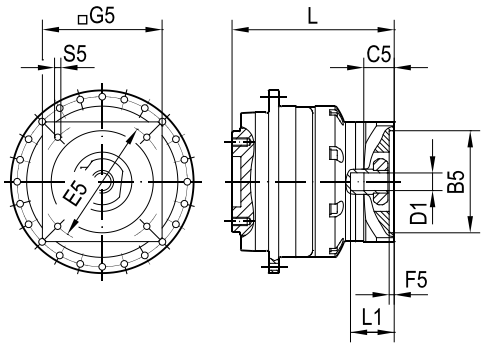

min. □ 152 Fig. B

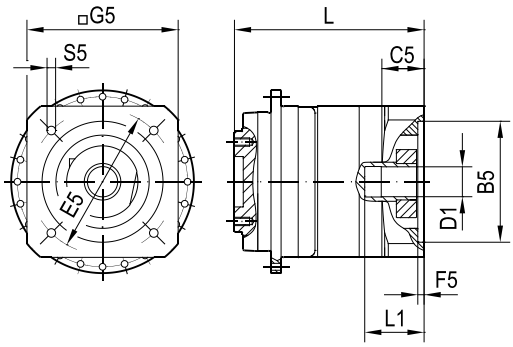

(→ 🕮 -)	D1	L1	B5	E5	G5	L	C5	F5	S5	Fig.
H.08.02	19	41	80	100	120	157	27	4	M6x15	A
H.09.02	19	42	95	115	120	158	28	4	M8x18	A
H.10.02	19	42	95	130	120	158	28	4	M8x18	A
H.11.02	19	42	110	130	120	158	28	4	M8x18	A
H.12.01	24	50	95	115	120	173	33.5	5	M8x18	A
H.12.02	24	50	95	115	152	173	34.5	5	M8x18	B
H.13.01	24	50	95	130	120	173	33.5	5	M8x18	A
H.13.02	24	50	95	130	152	173	34.5	5	M8x18	B
H.14.01	24	50	110	130	120	173	33.5	5	M8x18	A
H.14.02	24	50	110	130	152	173	34.5	5	M8x18	B
H.15.01	24	51	110	165	143	174	35	5	M10x24	A
H.15.02	24	50	110	165	152	173	35	5	M10x24	B
H.16.01	24	51	130	165	143	174	35	5	M10x24	A
H.16.02	24	50	130	165	152	173	35	5	M10x24	B
H.16.03	24	51	130	165	140	174	35	5	M10x24	A
H.17.02	24	50	180	215	192	173	35	5	M10x24	B
H.18.01	28	60	130	165	143	181	45.5	5	M10x24	A
H.18.02	28	60	130	165	138	181	45.5	5	M10x24	A
H.20.01	32	65	130	165	152	185	43	5	M10x24	B
H.21.01	32	65	130	215	192	185	43	5	M12x28	B
H.22.01	32	62	155	190	163	182	40	5	M10x24	B
H.23.01	32	65	180	215	190	185	43	5	M12x28	B
H.23.02	32	65	180	215	215	185	43	5	M12x28	B
H.24.01	38	80	114.3	200	180	201	58.5	5	M12x28	B
H.25.01	38	80	180	215	192	201	58.5	5	M12x28	B
H.25.02	38	80	180	215	215	201	58.5	5	M12x28	B
H.25.04	38	80	180	215	190	201	58.5	5	M12x28	B
H.26.01	38	80	230	265	240	201	58.5	5	M12x28	B

27781410/EN – 03/2022

			P7BG53								
Gear ratio			**64**	**80**	**88**	**110**	**112**	**137.5**	**140**	**154**	**160**
Short-time duty											
Peak torque	M_{a_pk}	Nm	990	990	990	990	990	990	990	990	990
Peak motor speed	n_{e_pk}	min^{-1}	6250	6250	6250	6250	6250	6250	6250	6250	6250
Peak radial force	$F_{R_a_pk}$	N	16400	16400	16400	16400	16400	16400	16400	16400	16400
Peak axial force	$F_{A_a_pk}$	N	6130	6130	6130	6130	6130	6130	6130	6130	6130
Peak breakdown torque	$M_{K_a_pk}$	Nm	1330	1330	1330	1330	1330	1330	1330	1330	1330
Continuous duty											
Nominal torque	M_{a_N}	Nm	720	790	720	790	790	790	790	790	790
Nominal motor speed	n_{e_N}	min^{-1}	3500	3500	3500	3500	3500	3500	3500	3500	3500
Nominal radial force	$F_{R_a_N}$	N	11600	12400	12800	13700	13700	13900	13900	13900	13900
Nominal axial force	$F_{A_a_N}$	N	5210	5210	5210	5210	5210	5210	5210	5210	5210
Nominal breakdown torque	$M_{K_a_N}$	Nm	1130	1130	1130	1130	1130	1130	1130	1130	1130
General technical data											
Torsional rigidity	c_{tr}	Nm/ arcmin	255	261	230	230	255	228	250	232	252
Rotational clearance	φ	arcmin	≤ 2 (R) – 3 (N)								
Pull-out rigidity	c_{pr}	Nm/ arcmin	1200								
Service life	L	h	> 20000								
Cyclic duration factor	ED	%	≤ 60								
Gear unit temperature	T_{max}	°C	90								
Ambient temperature	T_{amb}	°C	-15 – +40								
Nominal ambient temperature	T_{amb_N}	°C	20								
Efficiency	η	%	92	92	92	92	92	92	92	92	92
Sound pressure level	L_P	dB (A)	≤ 57	≤ 57	≤ 57	≤ 57	≤ 57	≤ 57	≤ 57	≤ 57	≤ 57
Degree of protection	–	–	IP65								
No-load speed	M_{e_0}	Nm	1.90	1.50	1.30	1.10	1.10	0.98	0.92	0.90	0.89
Emergency stop torque	M_{a_es}	Nm	2300	2300	2040	2040	2300	2040	2300	2040	2300
Mass moment of inertia incl. adapter											
Coupling Ø 14 mm	J	10^{-4} kgm^2	0.57	0.44	0.56	0.44	0.33	0.42	0.32	0.32	0.26
Coupling Ø 19 mm	J	10^{-4} kgm^2	0.80	0.67	0.79	0.66	0.55	0.65	0.54	0.55	0.49
Coupling Ø 24 mm	J	10^{-4} kgm^2	2.07	1.94	2.06	1.93	1.82	1.91	1.81	1.82	1.76
Coupling Ø 28 mm	J	10^{-4} kgm^2	2.62	2.49	2.61	2.49	2.38	2.47	2.37	2.37	2.32
Mass incl. adapter											
Coupling Ø min – max	m	kg	12.72 – 17.63								

27781410/EN – 03/2022

P7BG53..

57 089 00 19

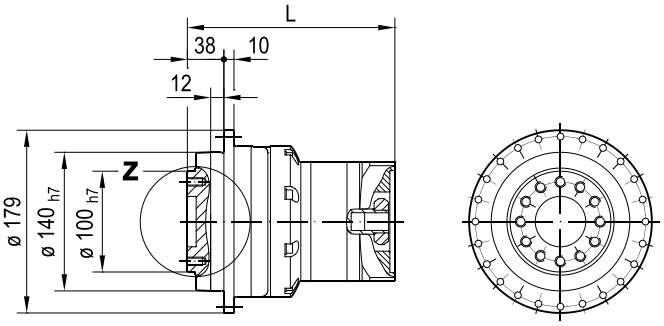

PxBG

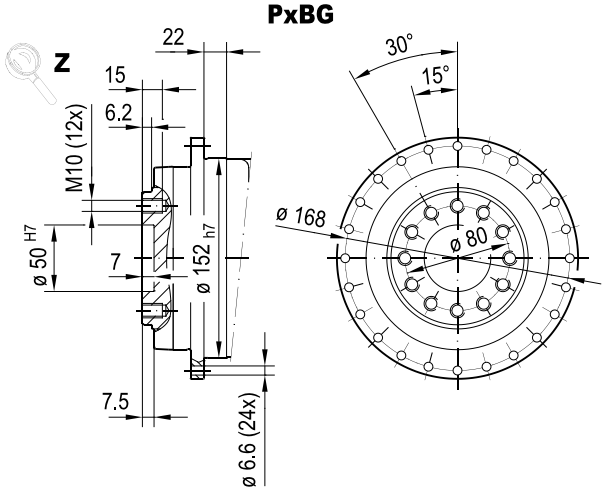

min. □ 95 Fig. A

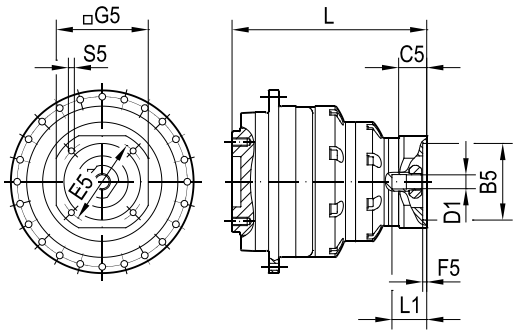

min. □ 120 Fig. B

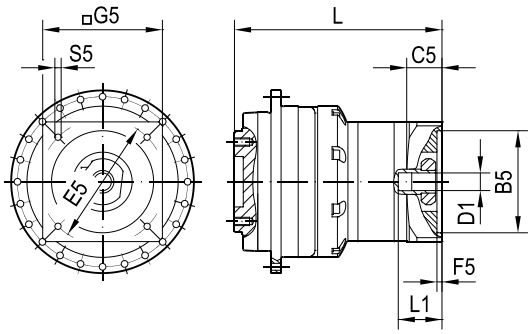

(→)	D1	L1	B5	E5	G5	L	C5	F5	S5	Fig.
H.04.03	14	37.4	50	95	95	184	24.2	3.5	M6x15	A
H.05.03	14	37.4	60	75	95	184	24.2	3.5	M6x15	A
H.06.03	14	37.4	80	100	95	184	24.2	4	M6x15	A
H.07.02	14	37.4	60	75	95	184	24.2	3.5	M5x12	A
H.08.01	19	42	80	100	95	191	28	4	M6x15	A
H.08.02	19	41	80	100	120	190	27	4	M6x15	B
H.09.01	19	42	95	115	105	191	28	4	M8x18	A
H.09.02	19	42	95	115	120	191	28	4	M8x18	B
H.10.02	19	42	95	130	120	191	28	4	M8x18	B
H.11.02	19	42	110	130	120	191	28	4	M8x18	B
H.12.01	24	50	95	115	120	206	33.5	5	M8x18	B
H.13.01	24	50	95	130	120	206	33.5	5	M8x18	B
H.14.01	24	50	110	130	120	206	33.5	5	M8x18	B
H.15.01	24	51	110	165	143	207	35	5	M10x24	B
H.16.01	24	51	130	165	143	207	35	5	M10x24	B
H.16.03	24	51	130	165	140	207	35	5	M10x24	B
H.17.01	24	52	180	215	192	208	36	5	M10x24	B
H.18.01	28	60	130	165	143	214	45.5	5	M10x24	B
H.18.02	28	60	130	165	138	214	45.5	5	M10x24	B
H.19.01	28	60	180	215	192	214	45.5	5	M12x28	B
H.19.02	28	60	180	215	215	214	45.5	5	M12x28	B
H.32.02	14	37.4	60	82	95	184	24.2	3.5	M5x12	A

27781410/EN – 03/2022

			P7BG53									
Gear ratio			**192.5**	**196**	**200**	**220**	**269.5**	**275**	**280**	**385**	**400**	**550**
Short-time duty												
Peak torque	M_{a_pk}	Nm	990	990	990	990	990	990	990	990	990	990
Peak motor speed	n_{e_pk}	min^{-1}	6250	6250	6250	6250	6250	6250	6250	6250	6250	6250
Peak radial force	$F_{R_a_pk}$	N	16400	16400	16400	16400	16400	16400	16400	16400	16400	16400
Peak axial force	$F_{A_a_pk}$	N	6130	6130	6130	6130	6130	6130	6130	6130	6130	6130
Peak breakdown torque	$M_{K_a_pk}$	Nm	1330	1330	1330	1330	1330	1330	1330	1330	1330	1330
Continuous duty												
Nominal torque	M_{a_N}	Nm	790	790	790	790	790	790	790	790	790	790
Nominal motor speed	n_{e_N}	min^{-1}	3500	3500	3500	3500	3500	3500	3500	3500	3500	3500
Nominal radial force	$F_{R_a_N}$	N	13900	13900	13900	13900	13900	13900	13900	13900	13900	13900
Nominal axial force	$F_{A_a_N}$	N	5210	5210	5210	5210	5210	5210	5210	5210	5210	5210
Nominal breakdown torque	$M_{K_a_N}$	Nm	1130	1130	1130	1130	1130	1130	1130	1130	1130	1130
General technical data												
Torsional rigidity	c_{tr}	Nm/ arcmin	226	241	250	229	222	225	242	222	233	217
Rotational clearance	φ	arcmin	≤ 2 (R) – 3 (N)									
Pull-out rigidity	c_{pr}	Nm/ arcmin	1200									
Service life	L	h	> 20000									
Cyclic duration factor	ED	%	≤ 60									
Gear unit temperature	T_{max}	°C	90									
Ambient temperature	T_{amb}	°C	-15 – +40									
Nominal ambient temperature	T_{amb_N}	°C	20									
Efficiency	η	%	92	92	92	92	92	92	92	92	92	92
Sound pressure level	L_P	dB (A)	≤ 57	≤ 57	≤ 57	≤ 57	≤ 57	≤ 57	≤ 57	≤ 57	≤ 57	≤ 57
Degree of protection	–	–	IP65									
No-load speed	M_{e_0}	Nm	0.85	0.80	0.76	0.72	0.70	0.69	0.68	0.60	0.58	0.50
Emergency stop torque	M_{a_es}	Nm	2040	2300	2300	2040	2040	2040	2300	2040	2280	2040
Mass moment of inertia incl. adapter												
Coupling Ø 14 mm	J	10^{-4} kgm^2	0.31	0.31	0.26	0.26	0.31	0.26	0.25	0.25	0.25	0.25
Coupling Ø 19 mm	J	10^{-4} kgm^2	0.54	0.53	0.49	0.49	0.53	0.49	0.48	0.48	0.48	0.48
Coupling Ø 24 mm	J	10^{-4} kgm^2	1.81	1.80	1.76	1.76	1.80	1.75	1.75	1.75	1.75	1.75
Coupling Ø 28 mm	J	10^{-4} kgm^2	2.37	2.36	2.31	2.31	2.36	2.31	2.31	2.31	2.30	2.30
Mass incl. adapter												
Coupling Ø min – max	m	kg	12.72 – 17.63									

27781410/EN – 03/2022

P7BG53..

57 089 00 19

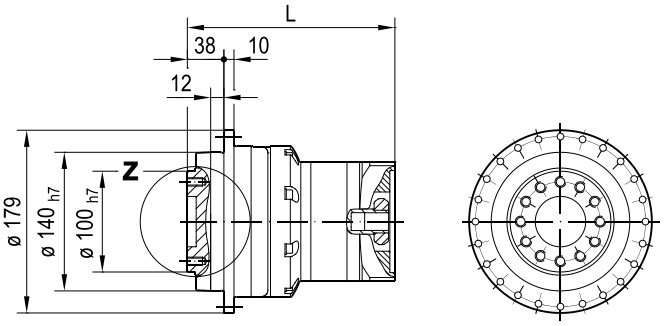

PxBG

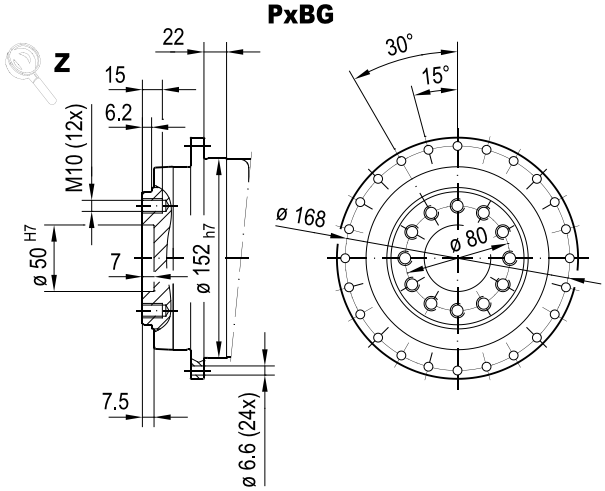

min. □ 95 Fig. A

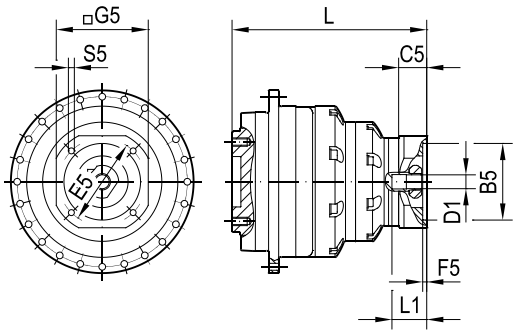

min. □ 120 Fig. B

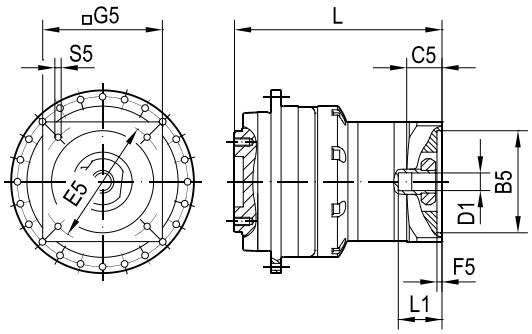

(→)	D1	L1	B5	E5	G5	L	C5	F5	S5	Fig.
H.04.03	14	37.4	50	95	95	184	24.2	3.5	M6x15	A
H.05.03	14	37.4	60	75	95	184	24.2	3.5	M6x15	A
H.06.03	14	37.4	80	100	95	184	24.2	4	M6x15	A
H.07.02	14	37.4	60	75	95	184	24.2	3.5	M5x12	A
H.08.01	19	42	80	100	95	191	28	4	M6x15	A
H.08.02	19	41	80	100	120	190	27	4	M6x15	B
H.09.01	19	42	95	115	105	191	28	4	M8x18	A
H.09.02	19	42	95	115	120	191	28	4	M8x18	B
H.10.02	19	42	95	130	120	191	28	4	M8x18	B
H.11.02	19	42	110	130	120	191	28	4	M8x18	B
H.12.01	24	50	95	115	120	206	33.5	5	M8x18	B
H.13.01	24	50	95	130	120	206	33.5	5	M8x18	B
H.14.01	24	50	110	130	120	206	33.5	5	M8x18	B
H.15.01	24	51	110	165	143	207	35	5	M10x24	B
H.16.01	24	51	130	165	143	207	35	5	M10x24	B
H.16.03	24	51	130	165	140	207	35	5	M10x24	B
H.17.01	24	52	180	215	192	208	36	5	M10x24	B
H.18.01	28	60	130	165	143	214	45.5	5	M10x24	B
H.18.02	28	60	130	165	138	214	45.5	5	M10x24	B
H.19.01	28	60	180	215	192	214	45.5	5	M12x28	B
H.19.02	28	60	180	215	215	214	45.5	5	M12x28	B
H.32.02	14	37.4	60	82	95	184	24.2	3.5	M5x12	A

27781410/EN – 03/2022

			P7BG61	
Gear ratio			**4**	**5.5**
Short-time duty				
Peak torque	M_{a_pk}	Nm	2120	3100
Peak motor speed	n_{e_pk}	min^{-1}	2500	3000
Peak radial force	$F_{R_a_pk}$	N	30700	30700
Peak axial force	$F_{A_a_pk}$	N	10000	10000
Peak breakdown torque	$M_{K_a_pk}$	Nm	3280	3280
Continuous duty				
Nominal torque	M_{a_N}	Nm	1500	1500
Nominal motor speed	n_{e_N}	min^{-1}	1500	1500
Nominal radial force	$F_{R_a_N}$	N	18300	20100
Nominal axial force	$F_{A_a_N}$	N	8540	8540
Nominal breakdown torque	$M_{K_a_N}$	Nm	1930	2130
General technical data				
Torsional rigidity	c_{tr}	Nm/ arcmin	531	486
Rotational clearance	φ	arcmin	≤ 1 (R) – 3 (N)	
Pull-out rigidity	c_{pr}	Nm/ arcmin	1387	
Service life	L	h	> 20000	
Cyclic duration factor	ED	%	≤ 60	
Gear unit temperature	T_{max}	°C	90	
Ambient temperature	T_{amb}	°C	-15 – +40	
Nominal ambient temperature	T_{amb_N}	°C	20	
Efficiency	η	%	94	94
Sound pressure level	L_P	dB (A)	≤ 68	≤ 62
Degree of protection	–	–	IP65	
No-load speed	M_{e_0}	Nm	16.00	14.00
Emergency stop torque	M_{a_es}	Nm	6020	6140
Mass moment of inertia incl. adapter				
Coupling Ø 38 mm	J	10^{-4} kgm^2	36.22	23.65
Coupling Ø 48 mm	J	10^{-4} kgm^2	50.09	37.51
Coupling Ø 55 mm	J	10^{-4} kgm^2	76.98	64.41
Mass incl. adapter				
Coupling Ø min – max	m	kg	31.64 – 43.51	

27781410/EN – 03/2022

P7BG61..

57 063 00 19

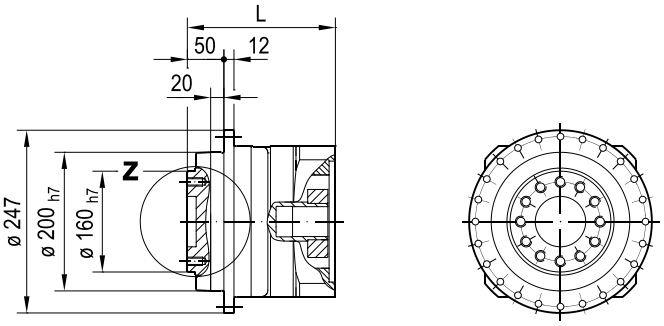

PxBG

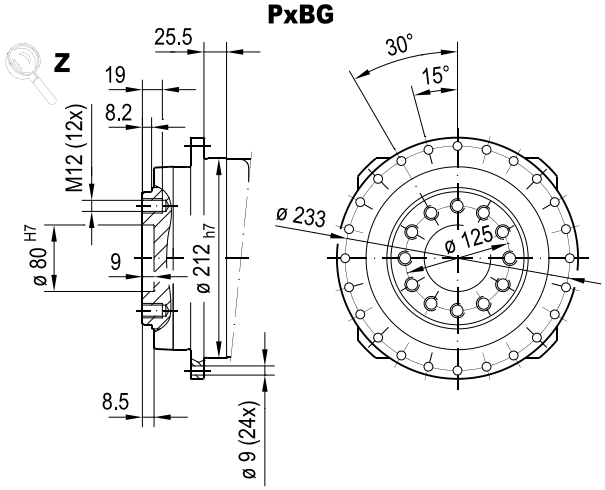

min. □ 215 Fig. B

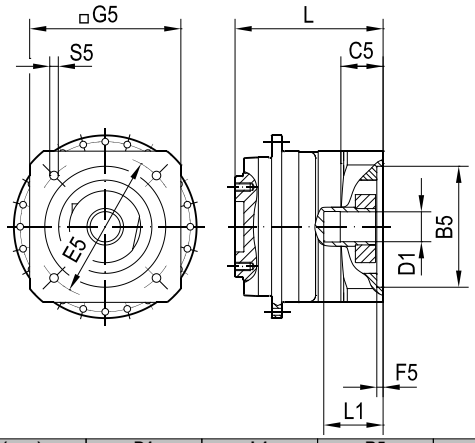

min. □ 260 Fig. C

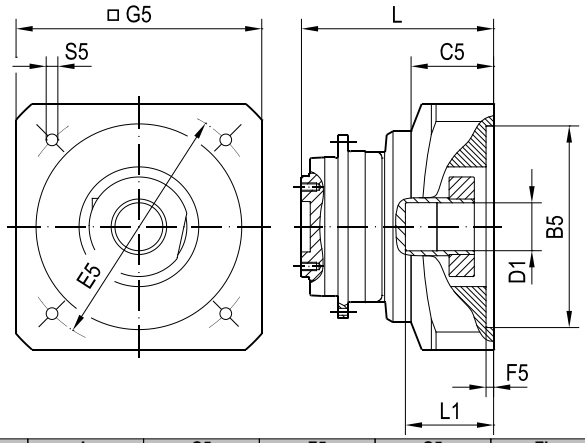

(→ ■ -)	D1	L1	B5	E5	G5	L	C5	F5	S5	Fig.
H.24.02	38	80	114.3	200	215	183	57.5	5	M12x28	B
H.25.03	38	80	180	215	215	183	57.5	5	M12x28	B
H.26.02	38	80	230	265	240	183	57.5	5	M12x28	B
H.27.01	48	85	180	215	215	188	54.5	7	M12x28	B
H.28.01	48	110	230	265	240	213	79.5	7	M12x28	B
H.30.01	48	82	250	300	262	185	51.5	7	M16x36	B
H.31.01	55	110	300	350	316	219	72	7	M16x36	C
H.33.01	55	110	250	300	260	219	72	7	M16x36	C

27781410/EN – 03/2022

			P7BG62							
Gear ratio			**16**	**20**	**22**	**27.5**	**28**	**38.5**	**40**	**55**
Short-time duty										
Peak torque	M_{a_pk}	Nm	2120	2120	3100	3100	2120	3100	2120	2400
Peak motor speed	n_{e_pk}	min^{-1}	5625	5625	5625	5625	5625	5625	5625	5625
Peak radial force	$F_{R_a_pk}$	N	30700	30700	30700	30700	30700	30700	30700	30700
Peak axial force	$F_{A_a_pk}$	N	10000	10000	10000	10000	10000	10000	10000	10000
Peak breakdown torque	$M_{K_a_pk}$	Nm	3280	3280	3280	3280	3280	3280	3280	3280
Continuous duty										
Nominal torque	M_{a_N}	Nm	1480	1420	1540	1660	1420	1960	1470	1820
Nominal motor speed	n_{e_N}	min^{-1}	2500	2500	2500	2500	2500	2500	2500	2500
Nominal radial force	$F_{R_a_N}$	N	23800	25500	26100	26100	26100	26100	26100	26100
Nominal axial force	$F_{A_a_N}$	N	8540	8540	8540	8540	8540	8540	8540	8540
Nominal breakdown torque	$M_{K_a_N}$	Nm	2520	2690	2770	2780	2780	2780	2780	2780
General technical data										
Torsional rigidity	c_{tr}	Nm/ arcmin	657	643	614	602	632	580	518	523
Rotational clearance	φ	arcmin	≤ 1 (R) – 3 (N)							
Pull-out rigidity	c_{pr}	Nm/ arcmin	1387							
Service life	L	h	> 20000							
Cyclic duration factor	ED	%	≤ 60							
Gear unit temperature	T_{max}	°C	90							
Ambient temperature	T_{amb}	°C	-15 – +40							
Nominal ambient temperature	T_{amb_N}	°C	20							
Efficiency	η	%	94	94	94	94	94	94	94	94
Sound pressure level	L_P	dB (A)	≤ 58	≤ 61	≤ 61	≤ 61	≤ 58	≤ 61	≤ 61	≤ 61
Degree of protection	–	–	IP65							
No-load speed	M_{e_0}	Nm	7.60	6.70	6.10	5.50	5.60	4.80	4.60	4.30
Emergency stop torque	M_{a_es}	Nm	6020	6020	6230	6230	6020	6240	4550	6240
Mass moment of inertia incl. adapter										
Coupling Ø 24 mm	J	10^{-4} kgm^2	7.10	5.21	6.31	4.71	3.52	3.26	2.59	2.46
Coupling Ø 32 mm	J	10^{-4} kgm^2	9.97	8.09	9.19	7.58	6.34	6.09	5.43	5.31
Coupling Ø 38 mm	J	10^{-4} kgm^2	12.95	11.07	12.17	10.56	9.37	9.12	8.36	8.23
Coupling Ø 48 mm	J	10^{-4} kgm^2	26.83	24.94	26.04	24.44	23.24	22.98	22.33	22.21
Mass incl. adapter										
Coupling Ø min – max	m	kg	31.99 – 44.29							

27781410/EN – 03/2022

P7BG62..

57 064 00 19

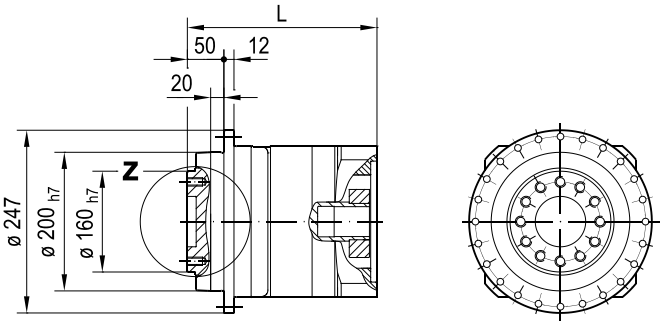

PxBG

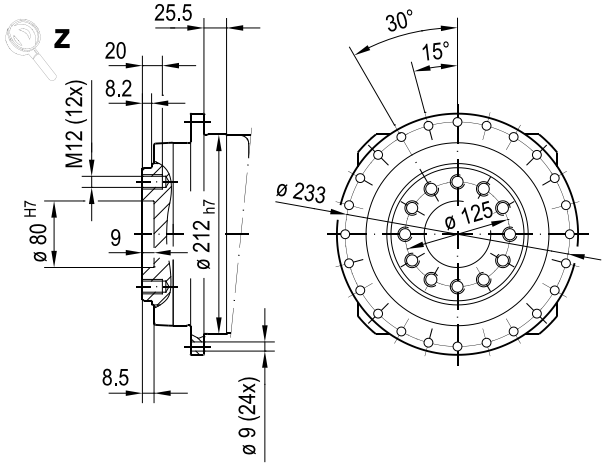

min. □ 152 Fig. A

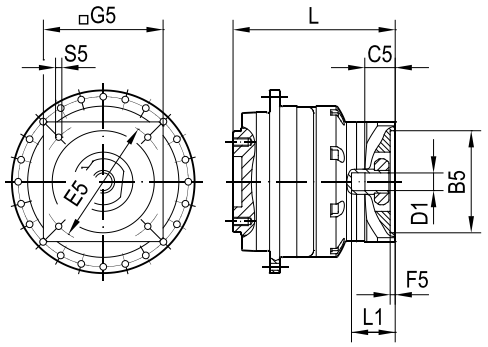

min. □ 215 Fig. B

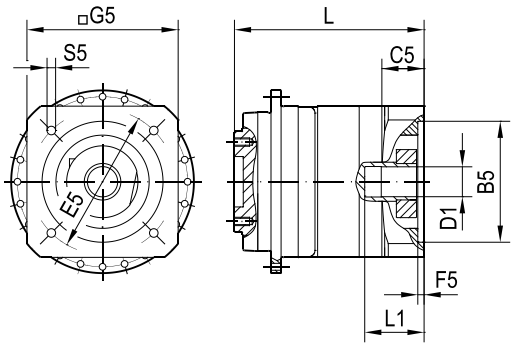

(→ 🕮 -)	D1	L1	B5	E5	G5	L	C5	F5	S5	Fig.
H.12.02	24	50	95	115	152	198	34.5	5	M8x18	A
H.13.02	24	50	95	130	152	198	34.5	5	M8x18	A
H.14.02	24	50	110	130	152	198	34.5	5	M8x18	A
H.15.02	24	50	110	165	152	199	35	5	M10x24	A
H.16.02	24	50	130	165	152	199	35	5	M10x24	A
H.17.02	24	50	180	215	192	199	35	5	M10x24	A
H.20.01	32	65	130	165	152	211	43	5	M10x24	A
H.21.01	32	65	130	215	192	211	43	5	M12x28	A
H.22.01	32	62	155	190	163	208	40	5	M10x24	A
H.23.01	32	65	180	215	190	211	43	5	M12x28	A
H.23.02	32	65	180	215	215	211	43	5	M12x28	A
H.24.01	38	80	114.3	200	180	226	58.5	5	M12x28	A
H.24.02	38	80	114.3	200	215	233	57.5	5	M12x28	B
H.25.01	38	80	180	215	192	226	58.5	5	M12x28	A
H.25.03	38	80	180	215	215	233	57.5	5	M12x28	B
H.25.04	38	80	180	215	190	226	58.5	5	M12x28	A
H.26.02	38	80	230	265	240	233	57.5	5	M12x28	B
H.27.01	48	85	180	215	215	238	54.5	7	M12x28	B
H.28.01	48	110	230	265	240	263	79.5	7	M12x28	B
H.30.01	48	82	250	300	262	235	51.5	7	M16x36	B

27781410/EN – 03/2022

			P7BG63									
Gear ratio			**64**	**80**	**88**	**110**	**112**	**137.5**	**140**	**154**	**160**	**192.5**
Short-time duty												
Peak torque	M_{a_pk}	Nm	2120	2120	3100	3100	2120	3100	2120	3100	2120	3100
Peak motor speed	n_{e_pk}	min^{-1}	5625	5625	5625	5625	5625	5625	5625	5625	5625	5625
Peak radial force	$F_{R_a_pk}$	N	30700	30700	30700	30700	30700	30700	30700	30700	30700	30700
Peak axial force	$F_{A_a_pk}$	N	10000	10000	10000	10000	10000	10000	10000	10000	10000	10000
Peak breakdown torque	$M_{K_a_pk}$	Nm	3280	3280	3280	3280	3280	3280	3280	3280	3280	3280
Continuous duty												
Nominal torque	M_{a_N}	Nm	1800	1800	1810	1970	1800	2040	1800	2100	1800	2100
Nominal motor speed	n_{e_N}	min^{-1}	3000	3000	3000	3000	3000	3000	3000	3000	3000	3000
Nominal radial force	$F_{R_a_N}$	N	26100	26100	26100	26100	26100	26100	26100	26100	26100	26100
Nominal axial force	$F_{A_a_N}$	N	8540	8540	8540	8540	8540	8540	8540	8540	8540	8540
Nominal breakdown torque	$M_{K_a_N}$	Nm	2780	2780	2780	2780	2780	2780	2780	2780	2780	2780
General technical data												
Torsional rigidity	c_{tr}	Nm/ arcmin	669	650	615	687	649	675	648	640	648	654
Rotational clearance	φ	arcmin	≤ 2 (R) – 3 (N)									
Pull-out rigidity	c_{pr}	Nm/ arcmin	1387									
Service life	L	h	> 20000									
Cyclic duration factor	ED	%	≤ 60									
Gear unit temperature	T_{max}	°C	90									
Ambient temperature	T_{amb}	°C	-15 – +40									
Nominal ambient temperature	T_{amb_N}	°C	20									
Efficiency	η	%	92	92	92	92	92	92	92	92	92	92
Sound pressure level	L_P	dB (A)	≤ 61	≤ 61	≤ 61	≤ 58	≤ 58	≤ 58	≤ 58	≤ 58	≤ 58	≤ 58
Degree of protection	–	–	IP65									
No-load speed	M_{e_0}	Nm	3.80	3.20	3.00	2.60	2.50	2.20	2.10	2.00	1.90	1.70
Emergency stop torque	M_{a_es}	Nm	6020	6020	6250	6250	6020	6250	6020	6250	6020	6250
Mass moment of inertia incl. adapter												
Coupling Ø 19 mm	J	10^{-4} kgm^2	1.84	1.36	1.80	1.33	0.90	1.27	0.86	0.89	0.66	0.85
Coupling Ø 24 mm	J	10^{-4} kgm^2	3.11	2.63	3.06	2.60	2.17	2.53	2.13	2.15	1.93	2.12
Coupling Ø 28 mm	J	10^{-4} kgm^2	3.66	3.18	3.61	3.15	2.72	3.08	2.69	2.71	2.49	2.67
Coupling Ø 32 mm	J	10^{-4} kgm^2	5.94	5.46	5.89	5.42	5.01	5.36	4.97	5.00	4.77	4.96
Coupling Ø 38 mm	J	10^{-4} kgm^2	8.86	8.38	8.81	8.35	7.94	8.28	7.90	7.92	7.70	7.89
Mass incl. adapter												
Coupling Ø min – max	m	kg	32.46 – 40.52									

27781410/EN – 03/2022

P7BG63..

57 090 00 19

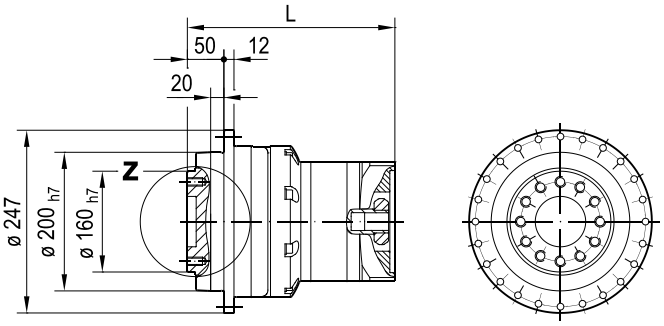

PxBG

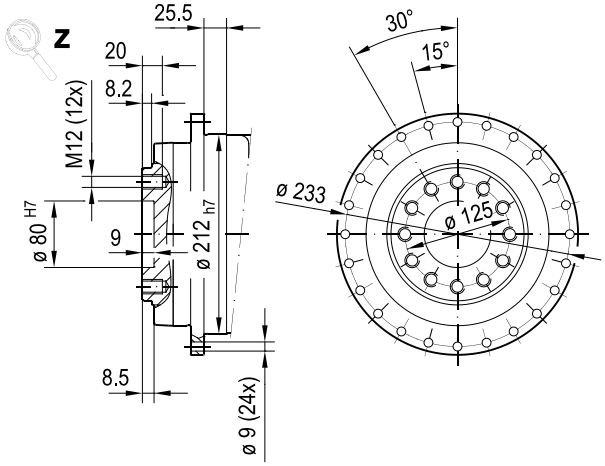

min. □ 120 Fig. A

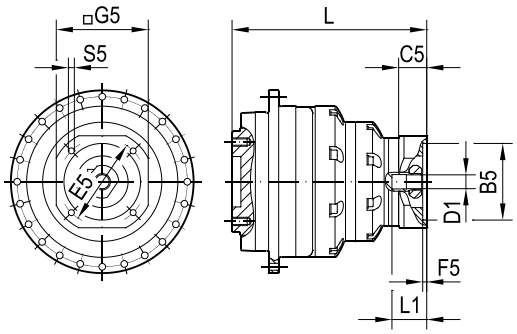

min. □ 152 Fig. B

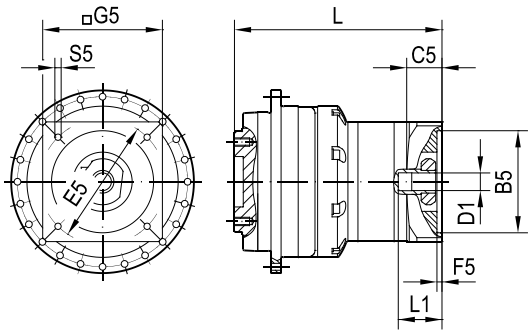

(→ 🕮 -)	D1	L1	B5	E5	G5	L	C5	F5	S5	Fig.
H.08.02	19	41	80	100	120	223	27	4	M6x15	A
H.09.02	19	42	95	115	120	224	28	4	M8x18	A
H.10.02	19	42	95	130	120	224	28	4	M8x18	A
H.11.02	19	42	110	130	120	224	28	4	M8x18	A
H.12.01	24	50	95	115	120	239	33.5	5	M8x18	A
H.12.02	24	50	95	115	152	239	34.5	5	M8x18	B
H.13.01	24	50	95	130	120	239	33.5	5	M8x18	A
H.13.02	24	50	95	130	152	239	34.5	5	M8x18	B
H.14.01	24	50	110	130	120	239	33.5	5	M8x18	A
H.14.02	24	50	110	130	152	239	34.5	5	M8x18	B
H.15.01	24	51	110	165	143	240	35	5	M10x24	A
H.15.02	24	50	110	165	152	239	35	5	M10x24	B
H.16.01	24	51	130	165	143	240	35	5	M10x24	A
H.16.02	24	50	130	165	152	239	35	5	M10x24	B
H.16.03	24	51	130	165	140	240	35	5	M10x24	A
H.17.02	24	50	180	215	192	239	35	5	M10x24	B
H.18.01	28	60	130	165	143	247	45.5	5	M10x24	A
H.18.02	28	60	130	165	138	247	45.5	5	M10x24	A
H.20.01	32	65	130	165	152	251	43	5	M10x24	B
H.21.01	32	65	130	215	192	251	43	5	M12x28	B
H.22.01	32	62	155	190	163	248	40	5	M10x24	B
H.23.01	32	65	180	215	190	251	43	5	M12x28	B
H.23.02	32	65	180	215	215	251	43	5	M12x28	B
H.24.01	38	80	114.3	200	180	267	58.5	5	M12x28	B
H.25.01	38	80	180	215	192	267	58.5	5	M12x28	B
H.25.02	38	80	180	215	215	267	58.5	5	M12x28	B
H.25.04	38	80	180	215	190	267	58.5	5	M12x28	B
H.26.01	38	80	230	265	240	267	58.5	5	M12x28	B

27781410/EN – 03/2022

			P7BG63								
Gear ratio			**196**	**200**	**220**	**269.5**	**275**	**280**	**385**	**400**	**550**
Short-time duty											
Peak torque	M_{a_pk}	Nm	2120	2120	3100	3100	3100	2120	3100	2110	2400
Peak motor speed	n_{e_pk}	min^{-1}	5625	5625	5625	5625	5625	5625	5625	5625	5625
Peak radial force	$F_{R_a_pk}$	N	30700	30700	30700	30700	30700	30700	30700	30700	30700
Peak axial force	$F_{A_a_pk}$	N	10000	10000	10000	10000	10000	10000	10000	10000	10000
Peak breakdown torque	$M_{K_a_pk}$	Nm	3280	3280	3280	3280	3280	3280	3280	3280	3280
Continuous duty											
Nominal torque	M_{a_N}	Nm	1800	1800	2100	2100	2100	1800	2100	1790	2040
Nominal motor speed	n_{e_N}	min^{-1}	3000	3000	3000	3000	3000	3000	3000	3000	3000
Nominal radial force	$F_{R_a_N}$	N	26100	26100	26100	26100	26100	26100	26100	26100	26100
Nominal axial force	$F_{A_a_N}$	N	8540	8540	8540	8540	8540	8540	8540	8540	8540
Nominal breakdown torque	$M_{K_a_N}$	Nm	2780	2780	2780	2780	2780	2780	2780	2780	2780
General technical data											
Torsional rigidity	c_{tr}	Nm/ arcmin	621	641	626	627	627	622	614	582	604
Rotational clearance	φ	arcmin	≤ 2 (R) – 3 (N)								
Pull-out rigidity	c_{pr}	Nm/ arcmin	1387								
Service life	L	h	> 20000								
Cyclic duration factor	ED	%	≤ 60								
Gear unit temperature	T_{max}	°C	90								
Ambient temperature	T_{amb}	°C	-15 – +40								
Nominal ambient temperature	T_{amb_N}	°C	20								
Efficiency	η	%	92	92	92	92	92	92	92	92	92
Sound pressure level	L_P	dB (A)	≤ 58	≤ 58	≤ 58	≤ 58	≤ 58	≤ 58	≤ 58	≤ 58	≤ 58
Degree of protection	–	–	IP65								
No-load speed	M_{e_0}	Nm	1.70	1.60	1.50	1.30	1.30	1.30	1.00	0.97	0.76
Emergency stop torque	M_{a_es}	Nm	6020	6020	6250	6260	6260	6020	6260	4550	6250
Mass moment of inertia incl. adapter											
Coupling Ø 19 mm	J	10^{-4} kgm^2	0.83	0.64	0.66	0.82	0.64	0.63	0.62	0.62	0.62
Coupling Ø 24 mm	J	10^{-4} kgm^2	2.09	1.91	1.92	2.09	1.91	1.90	1.89	1.89	1.89
Coupling Ø 28 mm	J	10^{-4} kgm^2	2.65	2.47	2.48	2.64	2.46	2.45	2.45	2.44	2.44
Coupling Ø 32 mm	J	10^{-4} kgm^2	4.94	4.76	4.77	4.93	4.75	4.74	4.74	4.73	4.73
Coupling Ø 38 mm	J	10^{-4} kgm^2	7.86	7.68	7.69	7.86	7.68	7.66	7.66	7.65	7.65
Mass incl. adapter											
Coupling Ø min – max	m	kg	32.46 – 40.52								

27781410/EN – 03/2022

P7BG63..

57 090 00 19

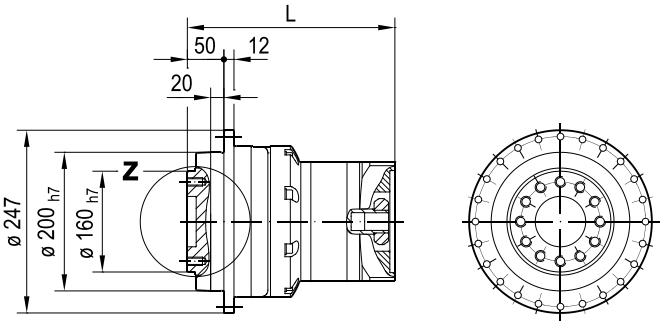

PxBG

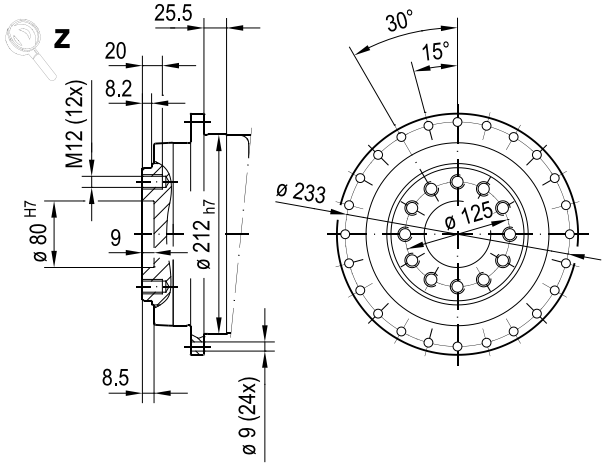

min. □ 120 Fig. A

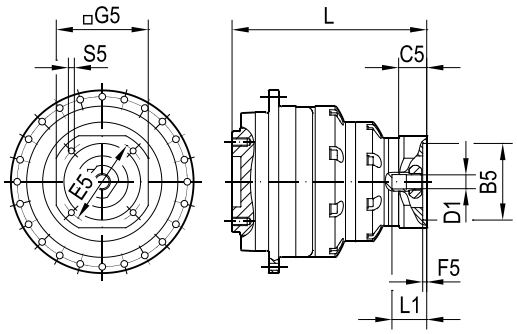

min. □ 152 Fig. B

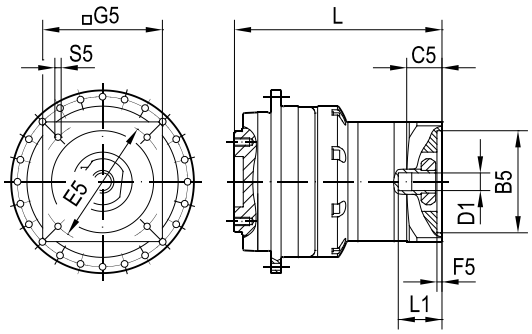

(→)	D1	L1	B5	E5	G5	L	C5	F5	S5	Fig.
H.08.02	19	41	80	100	120	223	27	4	M6x15	A
H.09.02	19	42	95	115	120	224	28	4	M8x18	A
H.10.02	19	42	95	130	120	224	28	4	M8x18	A
H.11.02	19	42	110	130	120	224	28	4	M8x18	A
H.12.01	24	50	95	115	120	239	33.5	5	M8x18	A
H.12.02	24	50	95	115	152	239	34.5	5	M8x18	B
H.13.01	24	50	95	130	120	239	33.5	5	M8x18	A
H.13.02	24	50	95	130	152	239	34.5	5	M8x18	B
H.14.01	24	50	110	130	120	239	33.5	5	M8x18	A
H.14.02	24	50	110	130	152	239	34.5	5	M8x18	B
H.15.01	24	51	110	165	143	240	35	5	M10x24	A
H.15.02	24	50	110	165	152	239	35	5	M10x24	B
H.16.01	24	51	130	165	143	240	35	5	M10x24	A
H.16.02	24	50	130	165	152	239	35	5	M10x24	B
H.16.03	24	51	130	165	140	240	35	5	M10x24	A
H.17.02	24	50	180	215	192	239	35	5	M10x24	B
H.18.01	28	60	130	165	143	247	45.5	5	M10x24	A
H.18.02	28	60	130	165	138	247	45.5	5	M10x24	A
H.20.01	32	65	130	165	152	251	43	5	M10x24	B
H.21.01	32	65	130	215	192	251	43	5	M12x28	B
H.22.01	32	62	155	190	163	248	40	5	M10x24	B
H.23.01	32	65	180	215	190	251	43	5	M12x28	B
H.23.02	32	65	180	215	215	251	43	5	M12x28	B
H.24.01	38	80	114.3	200	180	267	58.5	5	M12x28	B
H.25.01	38	80	180	215	192	267	58.5	5	M12x28	B
H.25.02	38	80	180	215	215	267	58.5	5	M12x28	B
H.25.04	38	80	180	215	190	267	58.5	5	M12x28	B
H.26.01	38	80	230	265	240	267	58.5	5	M12x28	B

27781410/EN – 03/2022

			P7BG71
Gear ratio			**5.5**
Short-time duty			
Peak torque	M_{a_pk}	Nm	5520
Peak motor speed	n_{e_pk}	min^{-1}	3125
Peak radial force	$F_{R_a_pk}$	N	27700
Peak axial force	$F_{A_a_pk}$	N	33000
Peak breakdown torque	$M_{K_a_pk}$	Nm	3900
Continuous duty			
Nominal torque	M_{a_N}	Nm	2820
Nominal motor speed	n_{e_N}	min^{-1}	1000
Nominal radial force	$F_{R_a_N}$	N	23500
Nominal axial force	$F_{A_a_N}$	N	24100
Nominal breakdown torque	$M_{K_a_N}$	Nm	3310
General technical data			
Torsional rigidity	c_{tr}	Nm/ arcmin	1111
Rotational clearance	φ	arcmin	≤ 1 (R) – 3 (N)
Pull-out rigidity	c_{pr}	Nm/ arcmin	4157
Service life	L	h	> 20000
Cyclic duration factor	ED	%	≤ 60
Gear unit temperature	T_{max}	°C	90
Ambient temperature	T_{amb}	°C	-15 – +40
Nominal ambient temperature	T_{amb_N}	°C	20
Efficiency	η	%	95
Sound pressure level	L_P	dB (A)	≤ 65
Degree of protection	–	–	IP65
No-load speed	M_{e_0}	Nm	19.00
Emergency stop torque	M_{a_es}	Nm	10900
Mass moment of inertia incl. adapter			
Coupling Ø 55 mm	J	10^{-4} kgm^2	97.98
Mass incl. adapter			
Coupling Ø min – max	m	kg	65.01 – 65.01

27781410/EN – 03/2022

P7BG71..

57 065 01 19

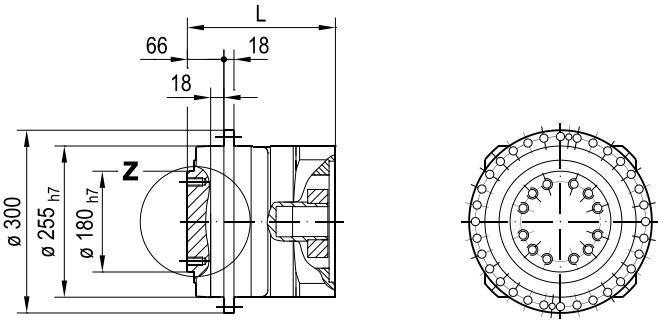

PxBG

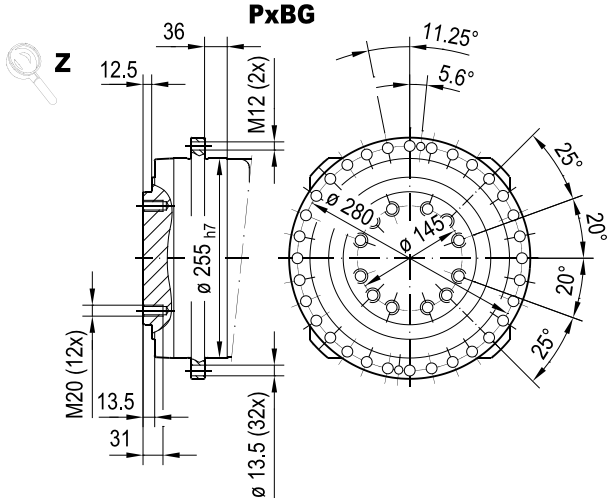

min. □ 260 Fig. B

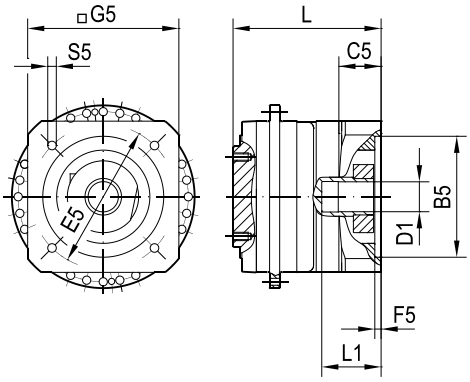

(→ -)	D1	L1	B5	E5	G5	L	C5	F5	S5	Fig.
H.31.01	55	110	300	350	316	245	72	7	M16x36	B
H.33.01	55	110	250	300	260	245	72	7	M16x36	B

27781410/EN – 03/2022

			P7BG72			
Gear ratio			**22**	**27.5**	**38.5**	**55**
Short-time duty						
Peak torque	M_{a_pk}	Nm	6110	6120	6130	4680
Peak motor speed	n_{e_pk}	min^{-1}	4375	4375	4375	4375
Peak radial force	$F_{R_a_pk}$	N	46200	46200	46200	46200
Peak axial force	$F_{A_a_pk}$	N	33000	33000	33000	33000
Peak breakdown torque	$M_{K_a_pk}$	Nm	6500	6500	6500	6500
Continuous duty						
Nominal torque	M_{a_N}	Nm	3560	3780	3880	3740
Nominal motor speed	n_{e_N}	min^{-1}	2000	2000	2000	2000
Nominal radial force	$F_{R_a_N}$	N	39200	39200	39200	39200
Nominal axial force	$F_{A_a_N}$	N	28000	28000	28000	28000
Nominal breakdown torque	$M_{K_a_N}$	Nm	5520	5520	5520	5520
General technical data						
Torsional rigidity	c_{tr}	Nm/ arcmin	907	974	1105	969
Rotational clearance	φ	arcmin	≤ 1.5 (R) – 3 (N)			
Pull-out rigidity	c_{pr}	Nm/ arcmin	4157			
Service life	L	h	> 20000			
Cyclic duration factor	ED	%	≤ 60			
Gear unit temperature	T_{max}	°C	90			
Ambient temperature	T_{amb}	°C	-15 – +40			
Nominal ambient temperature	T_{amb_N}	°C	20			
Efficiency	η	%	93	93	93	93
Sound pressure level	L_P	dB (A)	≤ 62	≤ 62	≤ 62	≤ 62
Degree of protection	–	–	IP65			
No-load speed	M_{e_0}	Nm	8.80	7.80	6.80	5.90
Emergency stop torque	M_{a_es}	Nm	12000	12000	12000	12100
Mass moment of inertia incl. adapter						
Coupling Ø 38 mm	J	10^{-4} kgm^2	25.54	19.53	13.70	10.66
Coupling Ø 48 mm	J	10^{-4} kgm^2	39.41	33.39	27.57	24.53
Coupling Ø 55 mm	J	10^{-4} kgm^2	66.30	60.28	54.75	51.72
Mass incl. adapter						
Coupling Ø min – max	m	kg	68.78 – 81.31			

27781410/EN – 03/2022

P7BG72..

57 066 01 19

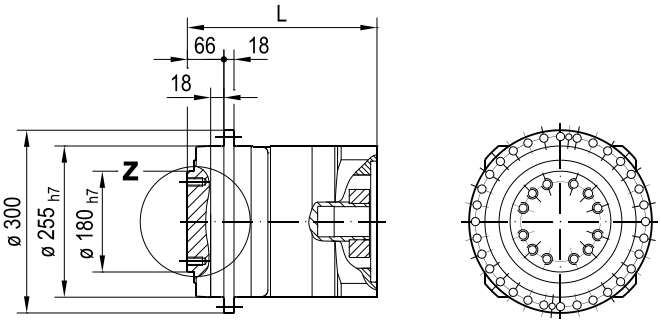

PxBG

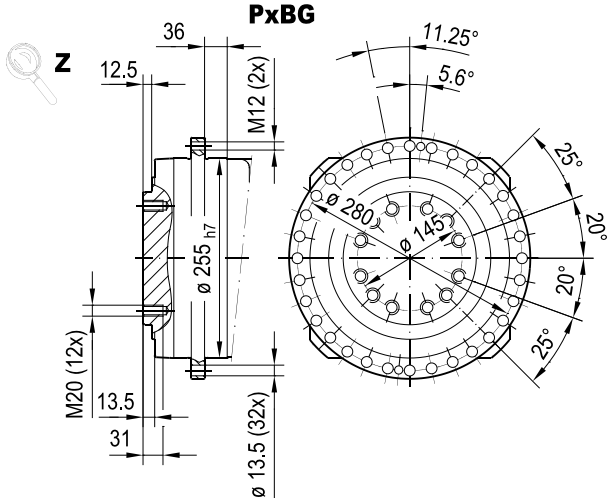

min. □ 215 Fig. A

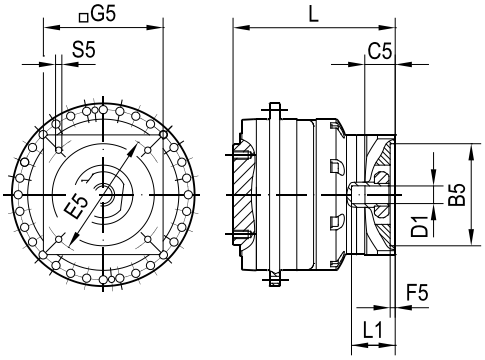

min. □ 260 Fig. B

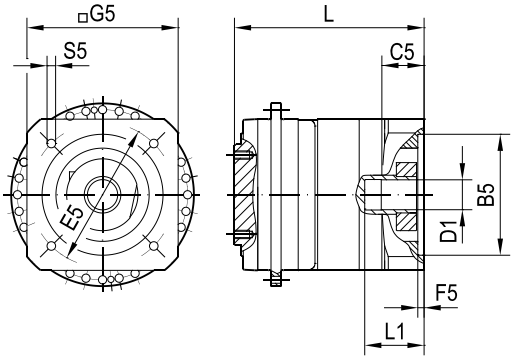

(→ -)	D1	L1	B5	E5	G5	L	C5	F5	S5	Fig.
H.24.02	38	80	114.3	200	215	291	57.5	5	M12x28	A
H.25.03	38	80	180	215	215	291	57.5	5	M12x28	A
H.26.02	38	80	230	265	240	291	57.5	5	M12x28	A
H.27.01	48	85	180	215	215	296	54.5	7	M12x28	A
H.28.01	48	110	230	265	240	321	79.5	7	M12x28	A
H.30.01	48	82	250	300	262	293	51.5	7	M16x36	A
H.31.01	55	110	300	350	316	327	72	7	M16x36	B
H.33.01	55	110	250	300	260	327	72	7	M16x36	B

27781410/EN – 03/2022

			P7BG73									
Gear ratio			**88**	**110**	**137.5**	**154**	**192.5**	**220**	**269.5**	**275**	**385**	**550**
Short-time duty												
Peak torque	M_{a_pk}	Nm	6150	6150	6150	6150	6150	6150	6150	6150	6150	4680
Peak motor speed	n_{e_pk}	min^{-1}	4375	4375	4375	4375	4375	4375	4375	4375	4375	4375
Peak radial force	$F_{R_a_pk}$	N	46200	46200	46200	46200	46200	46200	46200	46200	46200	46200
Peak axial force	$F_{A_a_pk}$	N	33000	33000	33000	33000	33000	33000	33000	33000	33000	33000
Peak breakdown torque	$M_{K_a_pk}$	Nm	6500	6500	6500	6500	6500	6500	6500	6500	6500	6500
Continuous duty												
Nominal torque	M_{a_N}	Nm	3560	3560	3780	3560	3780	3560	3880	3780	3880	3740
Nominal motor speed	n_{e_N}	min^{-1}	2000	2000	2000	2000	2000	2000	2000	2000	2000	2000
Nominal radial force	$F_{R_a_N}$	N	39200	39200	39200	39200	39200	39200	39200	39200	39200	39200
Nominal axial force	$F_{A_a_N}$	N	28000	28000	28000	28000	28000	28000	28000	28000	28000	28000
Nominal breakdown torque	$M_{K_a_N}$	Nm	5520	5520	5520	5520	5520	5520	5520	5520	5520	5520
General technical data												
Torsional rigidity	c_{tr}	Nm/ arcmin	285	290	282	286	284	282	283	286	281	280
Rotational clearance	φ	arcmin	≤ 2 (R) – 3 (N)									
Pull-out rigidity	c_{pr}	Nm/ arcmin	4157									
Service life	L	h	> 20000									
Cyclic duration factor	ED	%	≤ 60									
Gear unit temperature	T_{max}	°C	90									
Ambient temperature	T_{amb}	°C	-15 – +40									
Nominal ambient temperature	T_{amb_N}	°C	20									
Efficiency	η	%	92	92	92	92	92	92	92	92	92	92
Sound pressure level	L_P	dB (A)	≤ 61	≤ 57	≤ 57	≤ 57	≤ 57	≤ 57	≤ 57	≤ 57	≤ 57	≤ 57
Degree of protection	–	–	IP65									
No-load speed	M_{e_0}	Nm	3.80	3.00	2.40	2.10	1.70	1.50	1.20	1.20	0.84	0.58
Emergency stop torque	M_{a_es}	Nm	12100	12100	12100	12100	12100	12100	12100	12100	12100	12100
Mass moment of inertia incl. adapter												
Coupling Ø 24 mm	J	10^{-4} kgm^2	6.43	4.78	4.54	3.30	3.18	2.48	3.06	2.42	2.36	2.33
Coupling Ø 32 mm	J	10^{-4} kgm^2	9.31	7.66	7.42	6.13	6.00	5.32	5.88	5.26	5.21	5.18
Coupling Ø 38 mm	J	10^{-4} kgm^2	12.29	10.64	10.40	9.16	9.03	8.25	8.91	8.19	8.13	8.10
Coupling Ø 48 mm	J	10^{-4} kgm^2	26.16	24.51	24.27	23.02	22.90	22.23	22.78	22.17	22.11	22.08
Mass incl. adapter												
Coupling Ø min – max	m	kg	69.13 – 81.36									

27781410/EN – 03/2022

P7BG73..

57 091 01 19

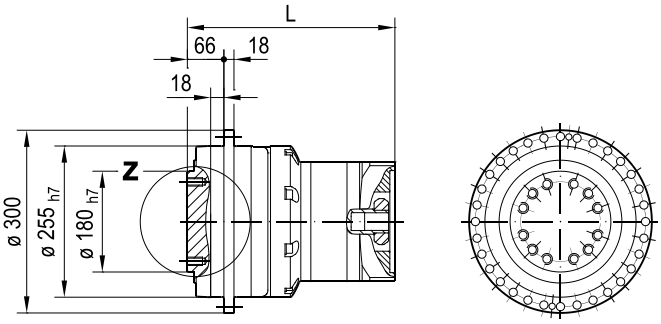

PxBG

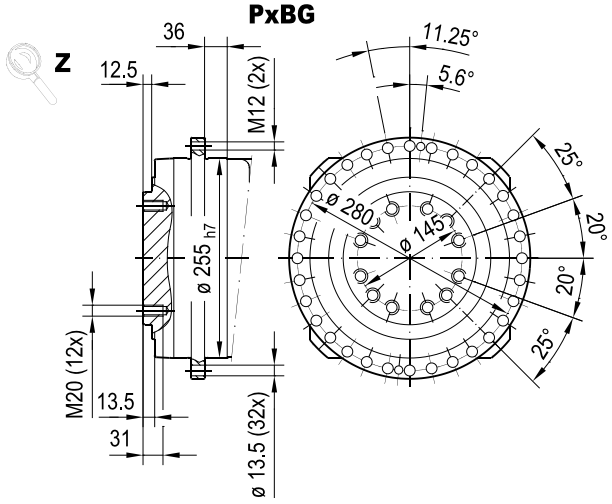

min. □ 152 Fig. A

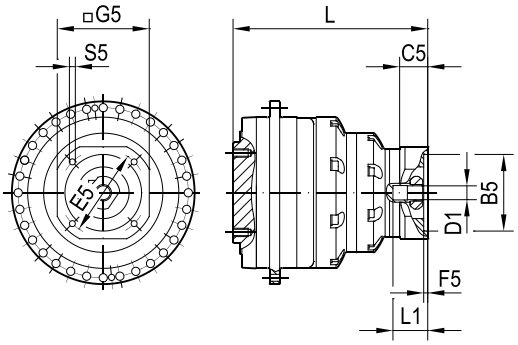

min. □ 215 Fig. B

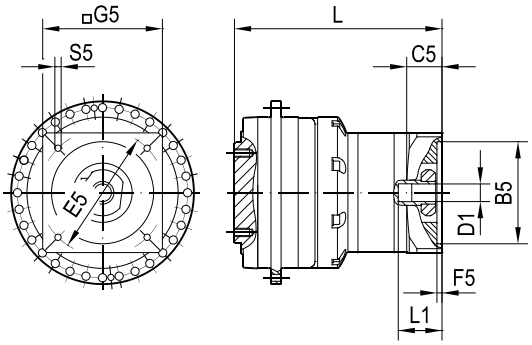

(→ 🕮 -)	D1	L1	B5	E5	G5	L	C5	F5	S5	Fig.
H.12.02	24	50	95	115	152	306	34.5	5	M8x18	A
H.13.02	24	50	95	130	152	306	34.5	5	M8x18	A
H.14.02	24	50	110	130	152	306	34.5	5	M8x18	A
H.15.02	24	50	110	165	152	306	35	5	M10x24	A
H.16.02	24	50	130	165	152	306	35	5	M10x24	A
H.17.02	24	50	180	215	192	306	35	5	M10x24	A
H.20.01	32	65	130	165	152	318	43	5	M10x24	A
H.21.01	32	65	130	215	192	318	43	5	M12x28	A
H.22.01	32	62	155	190	163	315	40	5	M10x24	A
H.23.01	32	65	180	215	190	318	43	5	M12x28	A
H.23.02	32	65	180	215	215	318	43	5	M12x28	A
H.24.01	38	80	114.3	200	180	334	58.5	5	M12x28	A
H.24.02	38	80	114.3	200	215	340	57.5	5	M12x28	B
H.25.01	38	80	180	215	192	334	58.5	5	M12x28	A
H.25.03	38	80	180	215	215	340	57.5	5	M12x28	B
H.25.04	38	80	180	215	190	334	58.5	5	M12x28	A
H.26.02	38	80	230	265	240	340	57.5	5	M12x28	B
H.27.01	48	85	180	215	215	345	54.5	7	M12x28	B
H.28.01	48	110	230	265	240	370	79.5	7	M12x28	B
H.30.01	48	82	250	300	262	342	51.5	7	M16x36	B

27781410/EN – 03/2022

6 Adapter kit

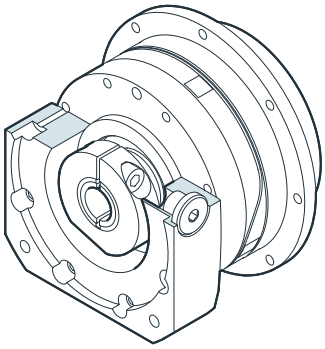

Almost any motor can be mounted to the PxG® planetary servo gear units thanks to the comprehensive modular adapter kit. To make this possible, clamp couplings, clamping rings, coupling sleeves, and adapter flanges are available in addition to the actual adapters.

6.1 Adapter types

The motor shaft is linked in a non-positive connection to the adapter shaft using a clamping ring. The clamping rings are designed for optimal clamping force as standard. As an option, the clamping rings are also available in a version optimized in regard of the mass moment of inertia. The design with optimized mass inertia is especially suitable for applications that require a lowest possible mass moment of inertia on the input side.

The adapter shafts are available in various designs. As standard, the design with rigid adapter shaft is used for performance classes P5 and P7. The design with metal bellows coupling (standard with P6.G) compensates a thermal linear expansion of the motor shaft and reduces possible stress on adapter bearing or motor bearing.

	Clamping ring clamp-force-optimized	**Clamping ring inertia-optimized**
Rigid adapter shaft	HN.. Standard P5.G/P7BG	HL.. Optional P5.G/P7BG
Metal bellows coupling	HB.. Standard P6.G Optional P5.G/P7BG	HC.. Optional P5.G, P6.G/P7BG

27781410/EN – 03/2022

6.2 Coupling sleeves

Coupling sleeves are used to compensate for deviating shaft diameters on motor and adapter shaft. This allows for mounting motor shafts with a smaller diameter. The coupling sleeve can also be mounted subsequently.

The difference of outer to inner diameter is the relevant dimension for selecting coupling sleeves.

In the adapter nomenclature, servo gear units delivered with a coupling sleeve mounted at the factory are described as follows:

H.08C01

H.08C01		
H.	Shaft and clamping ring design	
H.**08**C01		
08	Size of adapter shaft and flange	
H.08**C**01		
C	Code of the coupling sleeve	Differential value of outer and inner diameter: • C = 3 mm • D = 4 mm • E = 5 mm • F = 6 mm • J = 7 mm • H = 8 mm • I = 9 mm • J = 10 mm
H.08C**01**		
01	Flange code number	

6.3 Adapter flanges

Use the respective flanges for mounting the motors.

To facilitate mounting of motors with various connection dimensions, the gear unit can also be delivered without adapter flange. In this case, the designation code for the adapter size is "00".

The required adapter flange can then be installed when the motor is mounted on site. This provides you with maximum flexibility as the gear unit variance is reduced.

Contact SEW-EURODRIVE.

27781410/EN – 03/2022

7 Project planning

7.1 Gear unit characteristic map

The following figure shows an example of the gear unit characteristic map. This characteristic map depends on the configuration of characteristics such as performance class, shaft-hub connection (output design), size, gear ratio, and adapter shaft or of the coupling system of the gear unit.

The nominal operating point describes the intersection of nominal speed n_{e_N} and nominal torque M_{a_N}. Thus, the nominal operating point describes the permitted operating range for continuous duty under the nominal conditions, see chapter "Abbreviations and descriptions" (▸ 264).

Furthermore, the operating range can also be used during the optional continuous duty. Operation in this operating range depends on the relevant requirements on service life and the prevailing ambient conditions.

In case your requirements concerning service life and operating conditions deviate from the nominal conditions, contact SEW-EURODRIVE.

The permitted operating range in short-time duty or intermittent duty is described by the permitted limit speed n_{e_pk} and the permitted peak torque M_{a_pk}.

The emergency stop torque M_{a_es} describes the load capacity during emergency stop events under certain conditions, see chapter "Abbreviations and descriptions" (▸ 264).

27781410/EN – 03/2022

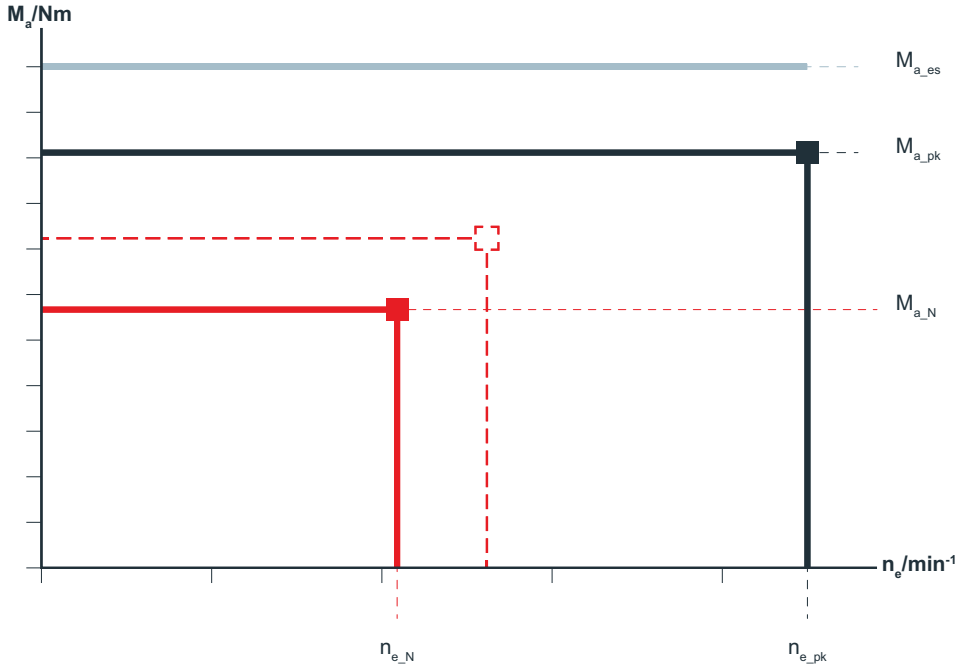

	Dynamic work envelope S3/S5 characteristic curve of the gear unit (short-time duty / intermittent duty)		Work envelope in continuous duty S1 characteristic curve of the gear unit for continuous duty
	Optimum work envelope after consultation with SEW-EURODRIVE		Emergency stop torque

27781410/EN – 03/2022

7.2 Project planning procedure

The following flow diagrams depict the schematic view of the simplified procedure for configuring a servo gear unit. The sample gear unit is to be used in a positioning drive in S1/S3/S5 operation, under normal operating conditions, at an installation altitude below 1000 m asl, and at an ambient temperature of 25 °C.

In case of deviations, contact SEW-EURODRIVE.

The following figure shows the gear unit loads in an application with gear unit characteristic map as an example:

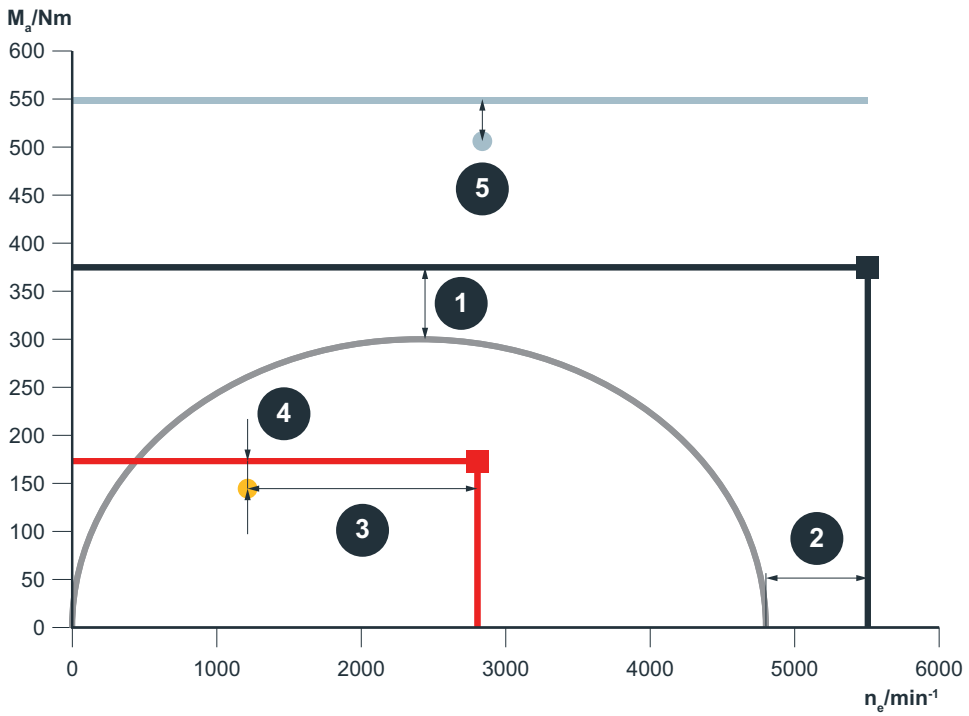

	Dynamic work envelope S3/S5 characteristic curve of the gear unit (short-time duty / intermittent duty)		Work envelope in continuous duty S1 characteristic curve of the gear unit for continuous duty
	Characteristic curve from the application load		Operating point, depending on the application
	Emergency stop torque, depending on the application	1	$M_{max} < M_{a_pk}$ Maximum torque of the application < peak torque
2	$n_{max} < n_{e_pk}$ Maximum speed of the application < limit speed	3	$n_{e_m} < n_{e_N}$ Mean input speed < permitted nominal speed of the application
4	$M_{a_kub} < M_{a_N}$ Cubic torque < nominal torque	5	$M_{es} < M_{a_es}$ Present emergency stop torque < permitted emergency stop torque

27781410/EN – 03/2022

7.2.1 Determining the radial load

A radial load F_R occurring at the gear unit output is calculated from the maximum torque M_{max} at the gear unit output and the diameter d of the mechanical transmission element.

Additionally occurring forces, such as the pretensioning force in belt drives or the polygon effect in chain drives, are taken in account using the transmission element factor f_z. If the exact pretensioning force is known, f_z = 1.0 can be set and the pretensioning force can be added to the radial load resulting from the torque.

F_R = 0 N if the drive is connected to the application without radial load.

$$F_{R_max} = \frac{M_{max} \times 2000}{d} \times f_z$$

F_{R_max}	Maximum radial load at the gear unit output in N
M_{max}	Maximum gear unit output torque including the load efficiency from all travel sections of the application in Nm
d	Diameter of the mechanical transmission element in mm
f_z	Transmission element factor

Note that an emergency stop via steep emergency stop ramps in the frequency inverter or via a mechanical brake will result in a torque load on the output of the gear unit that can be significantly higher than in normal operation. In this case, the resulting increased radial load must be checked.

27781410/EN – 03/2022

Transmission element factor f_z

When determining the resulting radial load, the type of transmission element mounted on the shaft end must be considered. The following transmission element factors f_z must also be considered for various transmission elements according to the following table:

Transmission element	Transmission element factor f_z	Comments
Gear wheels	1.15	< 17 teeth
Sprockets	1.40	< 13 teeth
Sprockets	1.25	< 20 teeth
Narrow V-belt pulleys	1.75	Consider influence of pretension force
Flat belt pulleys	2.50	Consider influence of pretension force
Toothed belt pulleys	1.50	Consider influence of pretension force
Pinion/gear rack, pretensioned	2.00	Consider influence of pretension force
Pinion/gear rack, not pretensioned	1.15	< 17 teeth

27781410/EN – 03/2022

7.2.2 Dynamic factor f_{dyn}

The dynamic factor f_{dyn} is a dynamic component in drive selection and describes a torque spike during the acceleration process. It depends on the acceleration time, the selected type of acceleration (law of motion), the natural frequency (f0) and the stiffness (vibration behavior of the drive train and the customer application) of the overall system.

Other variables influencing the level of the dynamic factor might be:

- Mass moment of inertia (motor to gear unit and application)
- Performance and control mode of the used controller

During operation, the motion in the application may be superimposed by the self-resonance of the drive system, due to the influences stated above. In the least favorable case, this effect may cause brief but large torque spikes.

In order to take this fact into account, the dynamic factor f_{dyn} can be taken into consideration during gear unit project planning depending on the law of motion and the applicable dynamics (acceleration time). By assigning the stiffness classes *soft*, *medium* and *stiff*, the dynamic factor f_{dyn} can be determined for the respective drive train in a simplified way.

Examples of stiffness classes

Soft: Drives with several transmission elements, e.g. coupling and additional belt transmission

Medium: Connection with a transmission element, e.g. coupling or pinion/gear rack (preloaded)

Stiff: Direct load connection, e.g. rotary table directly connected to flange block

The following illustration helps you to determine the dynamic factor f_{dyn} in a simplified manner depending on the real acceleration time and the type of acceleration.

27781410/EN – 03/2022

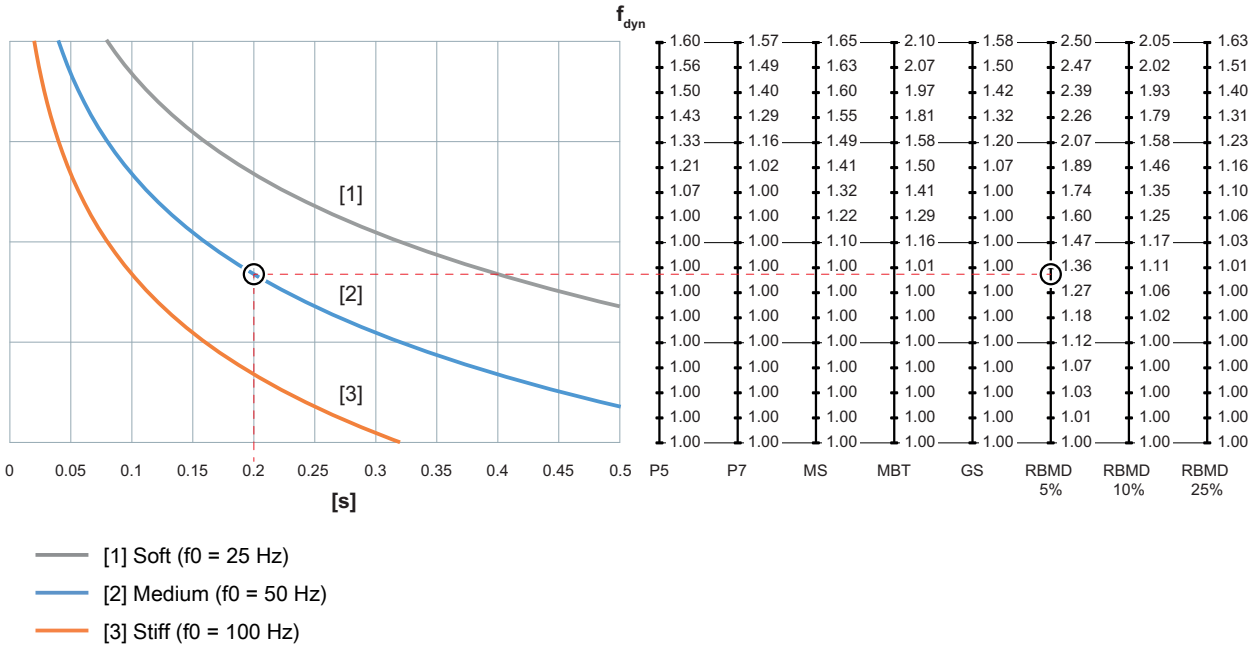

P5	Fifth-degree polynomial
P7	Seventh-degree polynomial
MS	Modified sine
MBT	Modified acceleration trapezoid
GS	Inclined sine curve (Bestehorn)
RBMD	Jerk limitation after jerk time

In the case of linear acceleration (classic triangular or trapezoidal type of movement) or pure sinusoidal type of movement, the dynamic factor f_{dyn} must be assumed to be a constant quantity depending on the stiffness class or natural frequency (f0). See the table below. In the case of linear (classic triangular or trapezoidal type of movement) and simple sinusoidal types of acceleration, the dynamic factor f_{dyn} is independent of the acceleration time due to jerky acceleration and thus constant for the respective stiffness class. The corresponding values are listed in the following table.

Dynamic factor f_{dyn}

Type of acceleration	Stiffness class		
	Soft (f0 = 25 Hz)	**Medium (f0 = 50 Hz)**	**Stiff (f0 = 100 Hz)**
Linear	**f_{dyn} = 2.8**	**f_{dyn} = 2.4**	**f_{dyn} = 2.1**
Sinusoidal	**f_{dyn} = 1.9**	**f_{dyn} = 1.7**	**f_{dyn} = 1.5**

27781410/EN – 03/2022

7.2.3 Project planning procedure for servo gear units

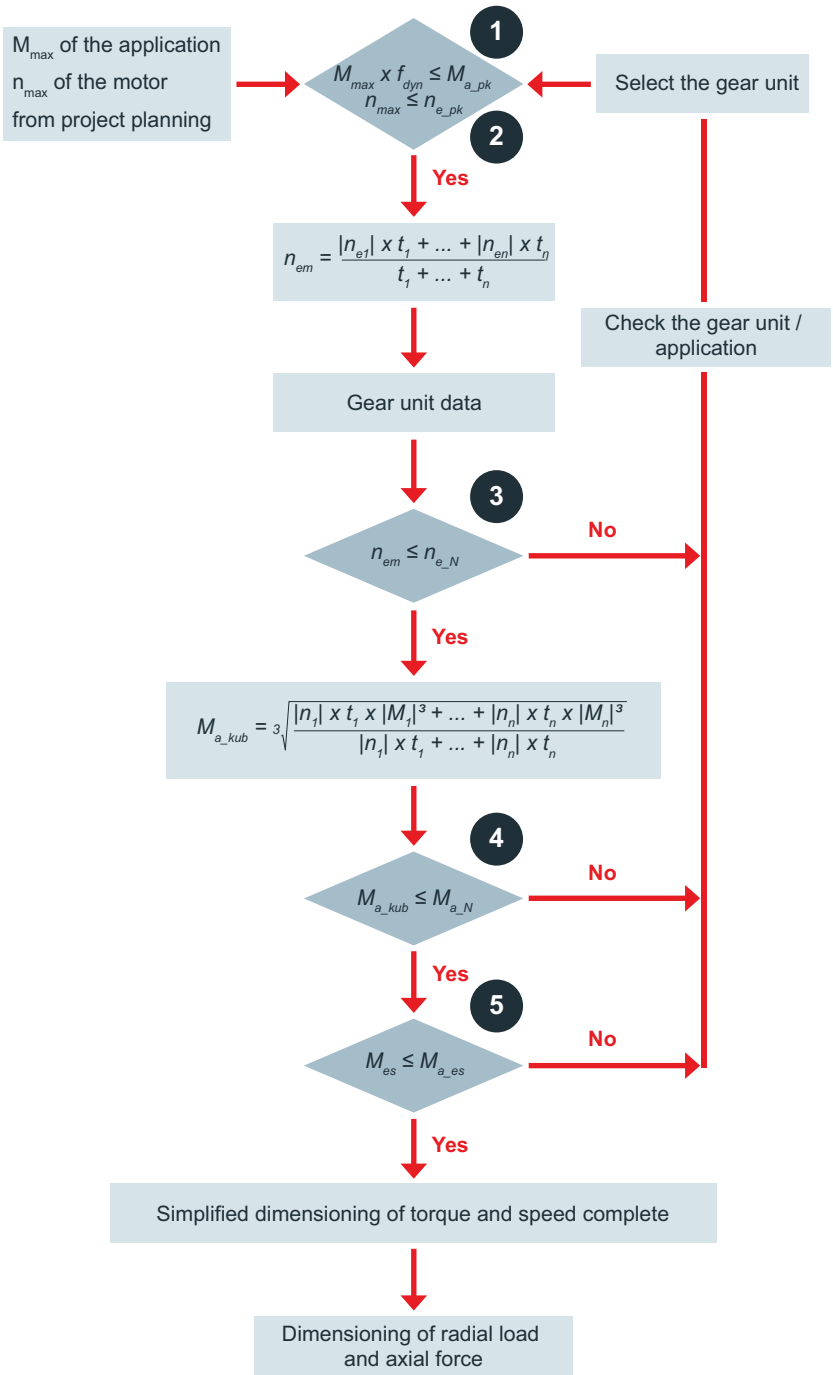

27781410/EN – 03/2022

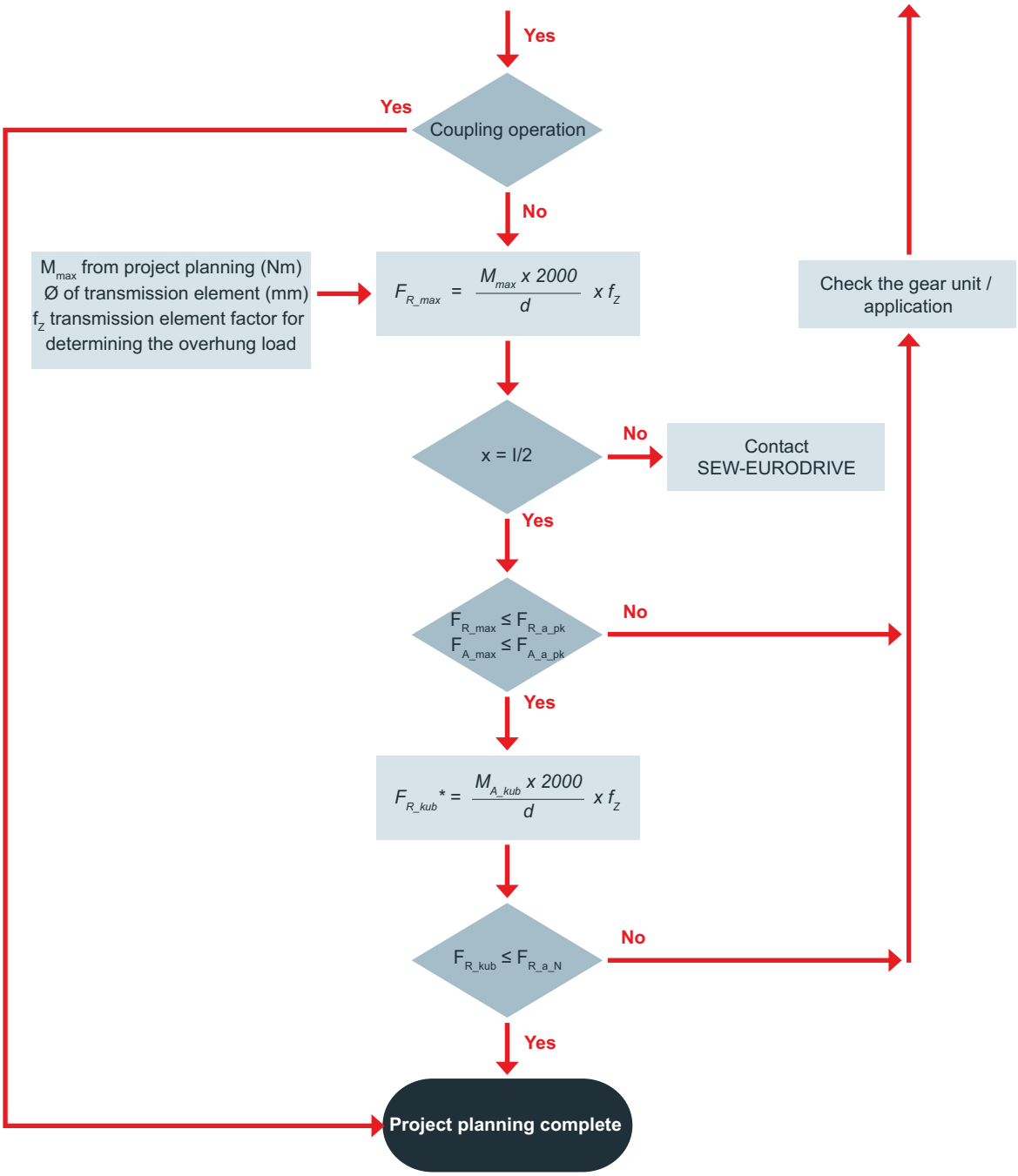
Yes
Yes
Coupling operation
No
M_{max} from project planning (Nm)
Ø of transmission element (mm)
f_z transmission element factor for determining the overhung load
$F_{R_max} = \frac{M_{max} \times 2000}{d} \times f_z$
Check the gear unit / application
x = l/2
No
Contact SEW-EURODRIVE
Yes
$F_{R_max} \leq F_{R_a_pk}$
$F_{A_max} \leq F_{A_a_pk}$
No
Yes
$F_{R_kub}* = \frac{M_{A_kub} \times 2000}{d} \times f_z$
$F_{R_kub} \leq F_{R_a_N}$
No
Yes
Project planning complete

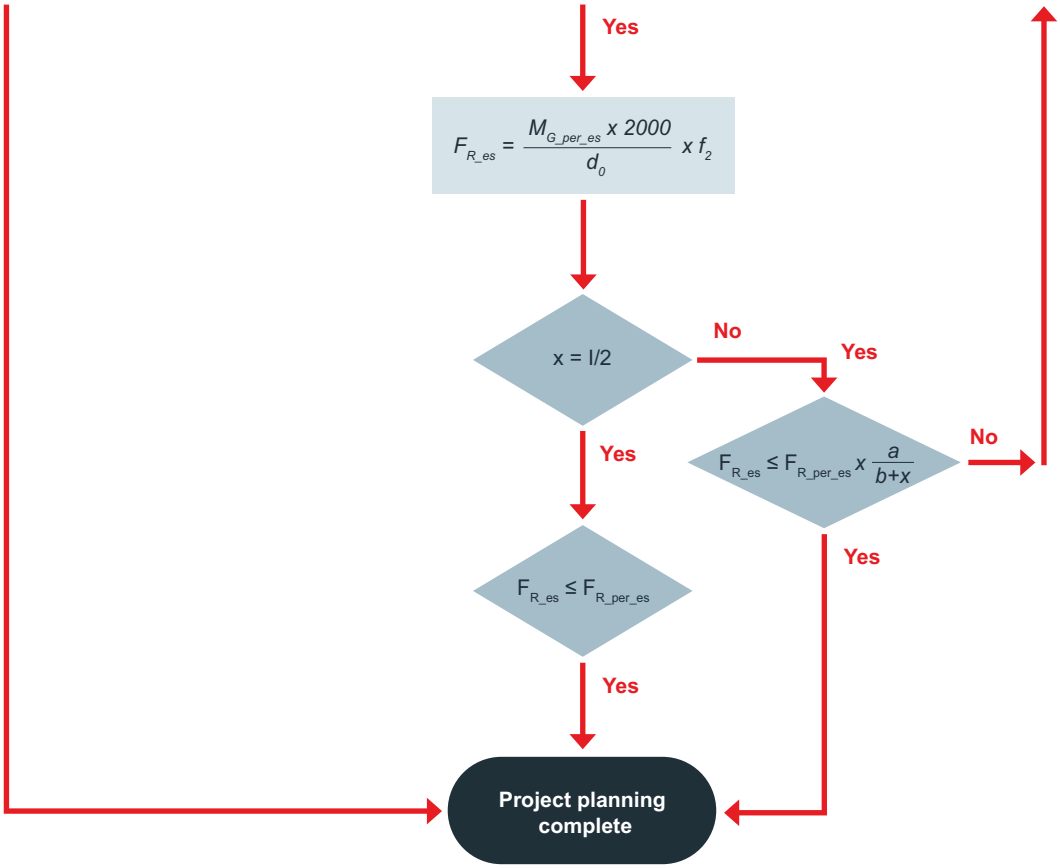

For preloaded drive designs (toothed belts, flat belts, narrow belts, and pinion/gear rack), the cubic radial load (F_{R_Kub}) equals the maximum radial load (F_{R_N}), see chapter "Determining the radial load" (▸ 252).

27781410/EN – 03/2022

7.2.4 Project planning procedure for servomotors

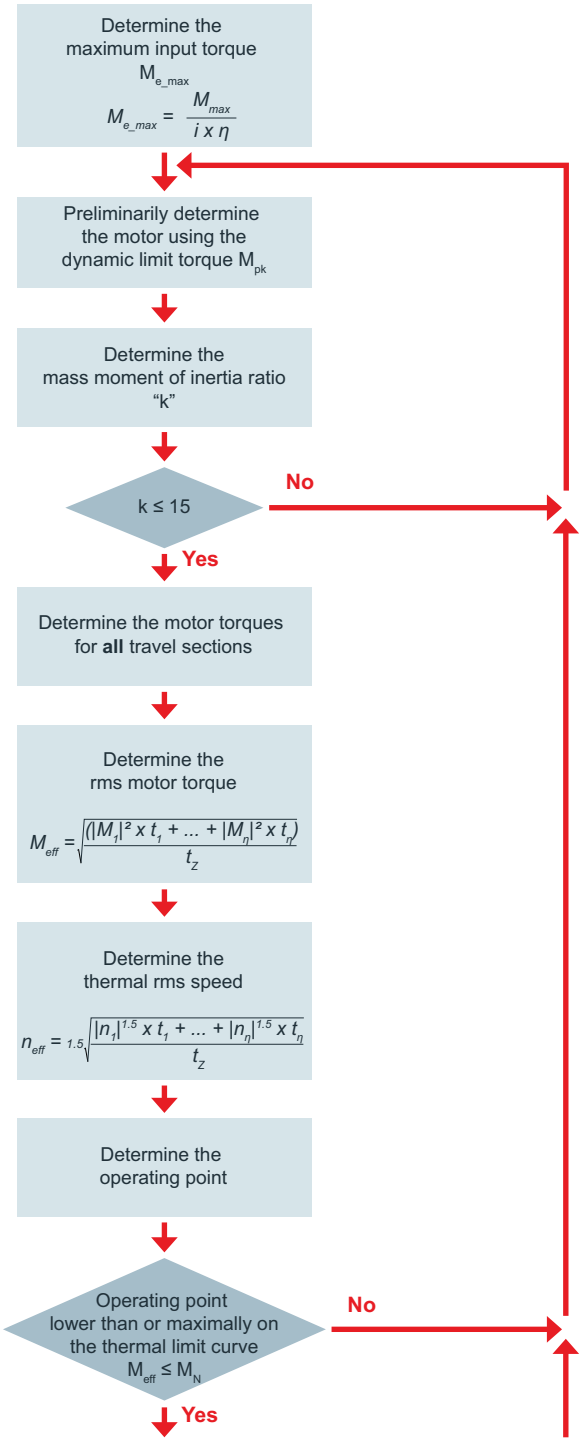

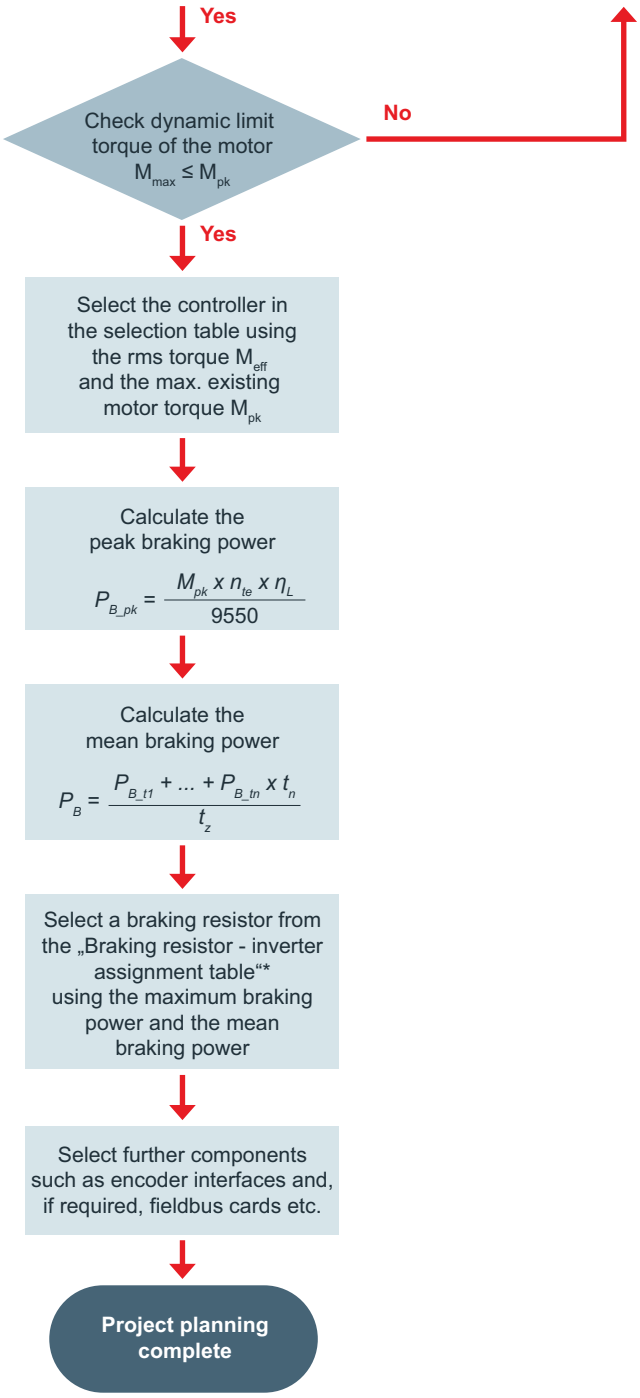

* Product manuals of the application inverters from the brand MOVI-C®, MOVIDRIVE® B, MOVIAXIS®.

For further information on the project planning of brakes, refer to the "Synchronous Servomotors" catalog.

27781410/EN – 03/2022

8 Appendix

8.1 Information on the technical data and dimension sheets

8.1.1 Information on the technical data – Definitions

The technical data are based on the standard configurations. These configurations are defined by the following features:

- Diameter of the coupling hubs
- Shaft and clamping ring design
- Lubricant types
- Rotational clearance
- Output bearing
- Shaft-hub connection

Gear unit configurations that deviate from the standard can have deviating technical data. For configuration-related technical data, contact SEW-EURODRIVE.

The following values in the tables refer to the standard diameter of the coupling hubs:

Peak torque	M_{a_pk}	Nm	
Peak rotational speed	n_{e_pk}	min^{-1}	
Nominal torque	M_{a_N}	Nm	
Nominal speed	n_{e_N}	min^{-1}	
No-load speed	M_{e0}	Nm	
Emergency stop torque	M_{a_es}	Nm	
Torsional rigidity	c_{tr}	Nm/arcmin	

- Depending on the performance class, the technical data is based on the **adapter types**:
  - P5: Option HN
  - P6: Option HB
  - P7: Option HN
- As a reference value, the technical data are based on the **lubricant** "S" with the Premium Sine Seal on the input gear stage.
- As a reference value for the technical data, the **rotational clearance** "N" is used for 1-stage, 2-stage and 3-stage gear units.
- Depending on the performance class, the technical data is based on the **output bearings**:
  - P5: Bearing type 1
  - P6: Bearing type 2
  - P7: Bearing type 1
- Depending on the performance class, the technical data are based on the following **shaft-hub connections**:

27781410/EN – 03/2022

- P5: Shaft-hub connection option B and N
- P6: Shaft-hub connection option B and N
- P7: Shaft-hub connection option B

- Standard diameter of the **coupling hubs**:
  - 1-stage = largest possible clamping hub diameter in the cylindrical variant (figure B on the dimension sheet)
  - 2-stage and 3-stage = largest possible clamping hub diameter in the variant with reduced preliminary stage (figure A on the dimension sheet)

The values are defined by the following table. A standard diameter is assigned depending on the size:

Gear unit size	Number of stages	Standard diameter of the coupling hub in mm
21	1	14
22	2	11
31	1	19
32	2	14
33	3	11
41	1	28
42	2	19
43	3	14
51	1	38
52	2	28
53	3	19
61	1	48
62	2	38
63	3	28
71	1	55
72	2	48
73	3	38

- All servo gear units are lubricated for life.

27781410/EN – 03/2022

8.1.2 Information on the dimension sheets – Geometric tolerances

Shaft ends

Solid shaft	ISO k6
Flange block	ISO h7/H7

Flange centering shoulder

Solid shaft	ISO g7
Flange block	ISO h7

Adapter shaft

Ø	11 – 55 mm	ISO F6

8.1.3 Information on the dimension sheets – Centering bores

Centering bores

Ø	> 13 – 16 mm	M5		Ø	> 30 – 38 mm	M12
Ø	> 16 – 21 mm	M6		Ø	> 38 – 50 mm	M16
Ø	> 21 – 24 mm	M8		Ø	> 50 – 85 mm	M20
Ø	> 24 – 30 mm	M10				

8.1.4 Information on the dimension sheets – Key

- Fig. A: Reduced housing shape
- Fig. B: Cylindrical housing shape
- Fig. C: Opening housing shape

27781410/EN – 03/2022

8.2 Abbreviations and descriptions

Designation	Formula symbol	Unit	Description
Characteristic curve for continuous duty	-	-	The red characteristic curve for continuous duty is used for project planning. The project planning rule prescribes that the operating point of a cycle (M_{a_kub}) must be lower than the characteristic curve for continuous duty.
Characteristic curve for short-time duty	-	-	The blue characteristic curve for short-time duty is used for project planning. The project planning rule prescribes that the black characteristic curve of the cycle or the maximum application torque M_{max} must be lower than the characteristic curve for short-time duty.
Tilting rigidity	c_{pr}	Nm/arcmin	The tilting rigidity is the ratio of applied breakdown torque and the resulting tilting angle at the output.
Torsional rigidity	c_{tr}	Nm/arcmin	Torsional rigidity of the gear unit with adapter: The torsional rigidity is the ratio of the applied output torque to the resulting torsional angle at the output when the input side is blocked.
Cyclic duration factor	ED	%	Maximum permitted cyclic duration factor of the gear unit. This value refers to the time proportion at speed ≠ 0 per cycle.
Peak axial load	$F_{A_a_pk}$	N	Maximum permitted axial load at the output shaft of the gear unit during short-time duty, with centered force application, and without any present radial load.
Nominal axial force	$F_{A_a_N}$	N	Nominal axial load at the gear unit output shaft, during continuous duty, with central force application, nominal speed n_{e_N}, nominal torque M_{a_N}, gear unit service life L, and without any radial load.
Dynamic factor	f_{dyn}	-	The dynamic factor f_{dyn} is a dynamic component in drive selection and describes a torque spike during acceleration.
Maximum permitted radial load	$F_{R_a_max}$	N	Maximum permitted radial load at the gear unit output shaft during continuous duty. The center of the shaft end is the load application point.
Nominal radial force	$F_{R_a_N}$	N	Nominal radial load at the gear unit output shaft, during continuous duty, with force application x = L/2 at the output shaft, nominal speed n_{e_N}, nominal torque M_{a_N}, gear unit service life L, and without any axial load.
Peak radial load	$F_{R_a_pk}$	N	Maximum permitted radial load at the output shaft of the gear unit during short-time duty, with point of force application x = L/2, but without any present axial load. Information: The value is defined without any active torque and without reference to speed. The force is applied from one direction and is not circumferential.
Cubic radial load	F_{R_kub}	N	Cubic radial load at cubic torque M_{a_kub}
Maximum radial load	F_{R_max}	N	Maximum radial load at the gear unit output shaft, calculated based on the project planning of the customer application.
Transmission element factor	f_z	-	The transmission element factor when determining the radial load includes the influence of the transmission element on the output shaft of the gear unit.
Mass moment of inertia	Y	10^{-4} kgm^2	Reduced mass moment of inertia of the gear unit including adapter, referring to the input end.
Mass moment of inertia	J_{ext}	kgm^2	Mass moment of inertia (external) reduced on motor shaft
Mass moment of inertia	J_{mot}	kgm^2	Mass moment of inertia of the motor
Mass moment of inertia ratio	k	-	Mass inertia ratio $J_{ext}/_{JMot}$
Service life	L	h	Gear unit service life at maximum permitted cyclic duration factor and maximum permitted cycle time, nominal output torque M_{a_N}, nominal input speed n_{e_N} and nominal overhung load $F_{R_a_N}$.
Sound pressure level	L_p	dB(A)	

27781410/EN – 03/2022

Designation	Formula symbol	Unit	Description
Mass	m	kg	Mass of the gear unit, including lubricant and the mass of the adapter.
No-load speed	M_{e_0}	Nm	Mean torque occurring at the gear unit input shaft, at no-load operation, at nominal speed n_{e_N}, and at nominal ambient temperature T_{amb_N}.
Cubic torque	M_{a_kub}	Nm	Effective torque (operating point) calculated during project planning.
Nominal torque	M_{a_N}	Nm	Nominal torque at the gear unit output shaft, during continuous duty, at nominal speed n_{e_N}, nominal ambient temperature T_{amb_N}, maximum permitted housing temperature T_{ma}, and gear unit service life L. Information: The nominal radial load or nominal axial load can apply additionally. When radial and axial forces are acting simultaneously, the catalog data become invalid and the combined forces must be recalculated accordingly.
Emergency stop torque	M_{a_es}	Nm	Maximum permitted torque at the output shaft of the gear unit during emergency stop. Maximally 1000 static events are permitted during the gear unit service life L.
Peak torque	M_{a_pk}	Nm	Maximum permitted torque at the output shaft of the gear unit during short-time duty.
Motor rms torque	M_{eff}	Nm	Effective torque requirement (in relation to the motor)
Maximum input torque	M_{e_max}	Nm	Maximum torque at the gear unit input shaft.
Nominal breakdown torque	$M_{K_a_N}$	Nm	Nominal breakdown torque during continuous duty with point of force application x = L/2 at the output shaft, nominal speed n_{e_N}, nominal torque M_{a_N}, gear unit service life L, without any axial load. The nominal breakdown torque is defined for the nominal radial load at x=L/2, which rotates around the input pressure point.
Peak breakdown torque	$M_{K_ap_k}$	Nm	Maximum permitted acceleration breakdown torque during short-time duty, with point of force application x = L/2 at the output shaft, without any axial load. The acceleration breakdown torque is defined for the lateral force of acceleration at x = L/2, which rotates around the input pressure point.
Maximum torque	M_{max}	Nm	Maximum torque at the gear unit output shaft, calculated based on the project planning of the customer application.
Dynamic limit torque	M_{pk}	Nm	Dynamic limit torque of the servomotor
Mean output speed	n_{a_m}	min^{-1}	Mean speed at the gear unit output shaft, calculated based on the project planning of the customer application.
rms speed	n_{eff}	min^{-1}	Effective thermal speed of the motor
Nominal speed	n_{e_N}	min^{-1}	Nominal speed at the gear unit input shaft, during continuous duty, at nominal torque M_{a_N}, nominal ambient temperature T_{amb_N}, maximum permitted housing temperature T_{max} and gear unit service life L.
Peak rotational speed	n_{e_pk}	min^{-1}	Maximum permitted rotational speed at the input shaft of the gear unit during short-time duty.
Maximum input speed	n_{max}	min^{-1}	Maximum speed required at the motor output shaft, calculated based on the project planning of the customer application. Is calculated based on the speed at the input shaft of the customer application.
Braking power	P_B	Nm	Braking power
Peak braking power	P_{B_pk}	Nm	Maximum braking power
Ambient temperature	T_{amb}	°C	Permitted ambient temperature range for operating the gear unit.
Nominal ambient temperature	T_{amb_N}	°C	Ambient temperature used as basis for calculating the permitted nominal values of the gear unit.
Gear unit temperature	T_{max}	°C	Maximum permitted temperature that may occur on the gear unit housing.
Cycle duration	t_z	min	Maximum permitted duration of a repetitive reference cycle; corresponds to the sum of all time components of motion and standstill.
Rotational clearance	φ	arcmin	The rotational clearance describes synchronism difference of both directions of rotation.

27781410/EN – 03/2022

Designation	Formula symbol	Unit	Description
Efficiency	η	%	Efficiency of the gear unit during continuous duty at nominal output torque M_{a_N}, nominal input speed n_{e_N}, and in mounting position M1.

27781410/EN – 03/2022

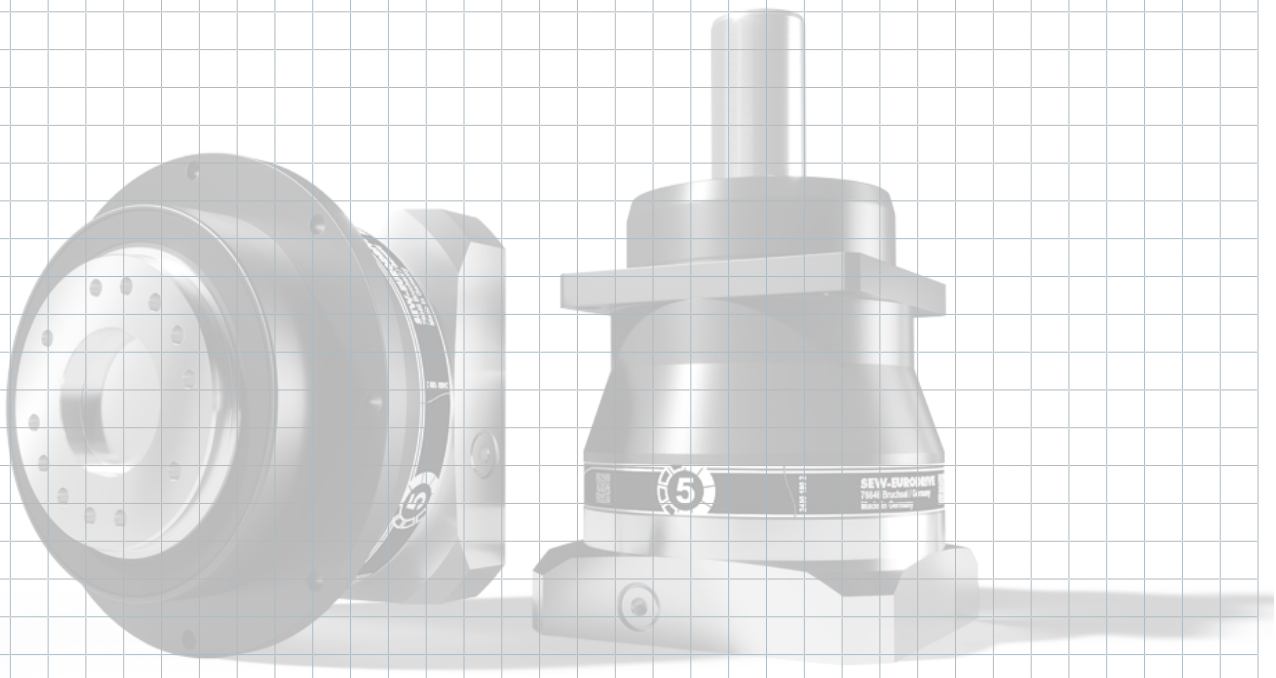
SEW-EURODRIVE

Scan it

SEW-EURODRIVE GmbH & Co KG
Ernst-Blickle-Str. 42
76646 Bruchsal/Germany
Tel. +49 7251 75-0
Fax +49 7251 75-1970
sew@sew-eurodrive.com
→ **www.sew-eurodrive.com**